J. theor. Biol. (2001) **208,** 261–285
doi:10.1006/jtbi.2000.2216, available online at http://www.idealibrary.com on IDEAL®

Building the Cellular Puzzle

Control in Multi-level Reaction Networks

JAN-HENDRIK S. HOFMEYR*† AND HANS V. WESTERHOFF‡

**Department of Biochemistry, University of Stellenbosch, Private Bag X1, Matieland 7602, South Africa and ‡Departments of Molecular Cell Physiology and Mathematical Biochemistry, BioCentrum Amsterdam, de Boelelaan 1087, NL-1081 HV Amsterdam, The Netherlands*

(*Received on* 12 *May* 2000, *Accepted in revised form on* 16 *October* 2000)

Quantitative conceptual tools dealing with control and regulation of cellular processes have been mostly developed for and applied to the pathways of intermediary metabolism. Yet, cellular processes are organized in different levels, metabolism forming the lowest level in a cascade of processes. Well-known examples are the DNA–mRNA–enzyme–metabolism cascade and the signal transduction cascades consisting of covalent modification cycles. The reaction network that constitutes each level can be viewed as a "module" in which reactions are linked by mass transfer. Although in principle all of these cellular modules are ultimately linked by mass transfer, in practice they can often be regarded as "isolated" from each other in terms of mass transfer. Here modules can interact with each other only by means of regulatory or catalytic effects—a chemical species in one module may affect the rate of a reaction in another module by binding to an enzyme or transport system or by acting as a catalyst. This paper seeks to answer two questions about the control and regulation of such multi-level reaction networks: (i) How can the control properties of the system as a whole be expressed in terms of the control properties of individual modules and the effects between modules? (ii) How do the control properties of a module in its isolated state change when it is embedded in the whole system through its connections with the other modules? In order to answer these questions a quantitative theoretical framework is developed and applied to systems containing two, three or four fully interacting modules; it is shown how it can be extended in principle to *n* modules. This newly developed theory therefore makes it possible to quantitatively dissect intermodular, internal and external regulation in multi-level systems.

© 2001 Academic Press

1. Introduction

The whole can be understood in terms of its parts and their interactions. This, at least as regards the control of cellular processes in steady state, is a central message of control analysis, a theoretical framework developed during the last three decades following the pioneering work of Kacser and Burns [see Kacser *et al.* (1995) for an updated version of their original paper] and Heinrich & Rapoport (1974). In more precise terms, control analysis allows the description of the control properties of a system in terms of the individual reaction properties of the steps in the system.

† Author to whom correspondence should be addressed. E-mail: jhsh@maties.sun.ac.za

0022–5193/01/030261 + 25 $35.00/0 © 2001 Academic Press

Control analysis has mostly concentrated on control at the level of intermediary metabolic pathways. However, the metabolic level is but one in a cascade of levels of cellular processes. These levels, or "modules", are effectively isolated from each other in terms of mass transfer, but may communicate through a complex set of regulatory and catalytic interactions. This is one sense in which cellular processes are intrinsically modular, the modules forming pieces of the cellular puzzle. When we need to distinguish this type of modularity from other possible decompositions such as, for example, into functional units (Westerhoff & van Dam, 1987; Brown *et al.*, 1990; Rohwer *et al.*, 1996), we call it *multi-level*. One example of a multi-level construction within the living cell is the cascade of DNA-replication, transcription, translation and metabolism (Westerhoff *et al.*, 1990). Another is the cascade of covalent modification cycles found in most signal transduction systems (Goldbeter & Koshland, 1984; Kahn & Westerhoff, 1991). In the study of such multi-level systems traditional control analysis can be applied to each of the individual levels. What is sought, however, is the integration of the control of individual modules with the intermodular regulatory interactions into a picture of the control of the whole system.

This paper builds on previous work (Kahn & Westerhoff, 1991; Westerhoff & Kahn, 1993; Van der Gugten & Westerhoff, 1997) that addressed this problem, but, as discussed further on, fell short of being general. The analysis of multi-level systems is reformulated and generalized in terms of the $\mathbf{CE} = \mathbf{I}$ square matrix formulation (Westerhoff & Kell, 1987; Westerhoff & van Dam, 1987) where $\mathbf{C}$ is a control coefficient matrix, $\mathbf{E}$ a matrix containing structural and local properties, and $\mathbf{I}$ the identity matrix; this relationship is discussed further on. Using concepts from the recently developed framework of regulation analysis (Hofmeyr *et al.*, 1993; Cornish-Bowden & Hofmeyr, 1994; Hofmeyr & Cornish-Bowden, 1996), we provide answers to the following two questions: (i) How can the control properties of the system as a whole be expressed in terms of the control of individual modules and the regulation of each module by the other modules? (ii) How do the control properties of a module change when it is imbedded in the whole system through its connections with the other modules?

Our main result is a rational method for understanding the cellular whole in terms of its modules and their interactions; in turn, each module can be understood in terms of its parts and their interactions. We can, therefore, build the cellular regulation puzzle.

2. Theory

A *multi-level reaction network* is defined as consisting of distinct modules that fulfill the condition of no mass transfer between modules, the intermodular links being formed by intermediary species in one module acting as catalysts or effectors of steps in another module. As will become clear, such systems possess the special property that one their descriptors, the $\mathbf{K}$-matrix, is block-diagonalizable, each block corresponding to one module (Schuster & Schuster, 1992). The term "K-modular" would be a technically more descriptive alternative for "multi-level", but is only informative if one knows what a $\mathbf{K}$-matrix is.

After discussing the symbolism to be used, we show how the control properties of a single module in isolation can be described; then we extend the description to systems of linked modules, showing how integral control of the system as a whole can be decomposed into intramodular control and intermodular response.

2.1. NOTE ON SYMBOLISM

We must clearly distinguish the properties of a module in isolation (*intramodular* control properties) from the properties of a module when it is embedded in the full system (*integral* control properties). To differentiate between the intramodular and integral coefficients, we shall adhere to current usage in control analysis, only inventing new symbols when necessary. In general, $\mathbf{C}$ refers to intramodular control, $\mathbf{E}$ to local structural ($\mathscr{K}$ and $\mathscr{L}$) and step properties ($\boldsymbol{\varepsilon}$) within a module, $\mathbf{R}$ to intramodular internal response and $\mathbf{O}$ to intramodular co-control (the meaning of these terms are defined where appropriate)—this constitutes established usage. $\mathbf{G}$ refers to integral control properties, while $\mathbf{M}$ refers

to intermodular response. A novel type of coefficient, the A-coefficient (amplification/attenuation) is symbolized by **A**. Boldface symbols refer to matrices of these coefficients, while italicized symbols refer to individual coefficients.

Many of the matrix equations use diagonal matrices, i.e. matrices with non-zero diagonal and zero off-diagonal elements. True diagonal matrices are symbolized by $\mathbf{D}(X)$ where X is the type of coefficient on the diagonal. Block-diagonal matrices, also called quasi-diagonal matrices by Gantmacher (1960), are also used. Although a less restrictive definition is possible, we define a block-diagonal matrix as a partitioned matrix that contains non-singular submatrices as its diagonal blocks and zero submatrices as its off-diagonal blocks; it is symbolized by $\mathbf{D}(\mathbf{X})$ where $\mathbf{X}$ is the type of submatrix on the diagonal.

2.2. INTRAMODULAR CONTROL PROPERTIES OF A SINGLE MODULE

First, we consider a single module in isolation, i.e. we regard all intermediate concentrations in other modules that directly affect reaction rates in the module under consideration as fixed parameters (we use "intermediate" as a general term for molecular species in modules, i.e. metabolites, enzymes, polynucleotides, etc.). If there are n reactions that convert m variable intermediates in the module (of which r are independent), then Hofmeyr & Cornish-Bowden (1996) have shown how, from the theory of control analysis, the following general matrix expression for the module can be obtained:

$$\begin{bmatrix} \mathbf{C}^{\mathbf{J_I}} \\ \mathbf{C}^{\mathbf{s_I}} \end{bmatrix} [\mathscr{K} \quad -\boldsymbol{\varepsilon}_{\mathbf{s}}\mathscr{L}] = \begin{bmatrix} \mathbf{I}_{n-r} & \mathbf{0} \\ \mathbf{0} & \mathbf{I}_r \end{bmatrix}, \qquad (1)$$

where $\mathbf{C}^{\mathbf{J_I}} = (n-r)\times n$ matrix of independent flux-control coefficients, defined as $C_j^{J_i} = \partial \ln J_i / \partial \ln v_j$, $\mathbf{C}^{\mathbf{s_I}} = r \times n$ matrix of independent concentration-control coefficients, defined as $C_j^{s_i} = \partial \ln s_i / \partial \ln v_j$, and $\boldsymbol{\varepsilon}_{\mathbf{s}} = n \times m$ matrix of elasticity coefficients, defined as $\varepsilon_{s_i}^{v_j} = \partial \ln v_j / \partial \ln s_i$. The $\mathscr{K}$-matrix is the scaled form of a matrix $\mathbf{K}$ (the null-matrix or kernel of the stoichiometry matrix) that expresses the dependency of the steady-state fluxes on the independent fluxes ($\mathbf{J} = \mathbf{K}\mathbf{J_I}$), while the $\mathscr{L}$-matrix is the scaled form of a matrix $\mathbf{L}$ that expresses the dependency of the differential equations that constitute the kinetic model on the independent differential equations ($\mathrm{d}\mathbf{s}/\mathrm{d}t = \mathbf{L}\,\mathrm{d}\mathbf{s_I}/\mathrm{d}t$) (Reder, 1988; Hofmeyr & Cornish-Bowden, 1996).

If $\mathbf{C} = [\mathbf{C}^{\mathbf{J_I}} \ \mathbf{C}^{\mathbf{s_I}}]^{\mathrm{T}}$ and $\mathbf{E} = [\mathscr{K} \ \ -\boldsymbol{\varepsilon}_{\mathbf{s}}\mathscr{L}]$, eqn (1) reduces to a particularly elegant form:

$$\mathbf{CE} = \mathbf{I}. \qquad (2)$$

Both $\mathbf{C}$ and $\mathbf{E}$ are square invertible $n \times n$ matrices, i.e. the equation can also be written as $\mathbf{EC} = \mathbf{I}$, $\mathbf{C} = \mathbf{E}^{-1}$, or $\mathbf{E} = \mathbf{C}^{-1}$. Equation (2) is general; it holds for any network of reactions. It was originally developed by Westerhoff & Kell (1987) and Westerhoff & van Dam (1987); their internal format was different but equally general. Subsequently, other internal formats for this equation were proposed (Cascante *et al.*, 1989a, b; Westerhoff *et al.*, 1994; Hofmeyr & Cornish-Bowden, 1996).

For module 1 in the system in Fig. 1(a) the explicit control matrix would be

$$\begin{bmatrix} C_{1a}^{J_1} & C_{1b}^{J_1} \\ C_{1a}^{s_1} & C_{1b}^{s_1} \end{bmatrix} \begin{bmatrix} 1 & -\varepsilon_{s_1}^{v_{1a}} \\ 1 & -\varepsilon_{s_1}^{v_{1b}} \end{bmatrix} = \begin{bmatrix} 1 & 0 \\ 0 & 1 \end{bmatrix}, \qquad (3)$$

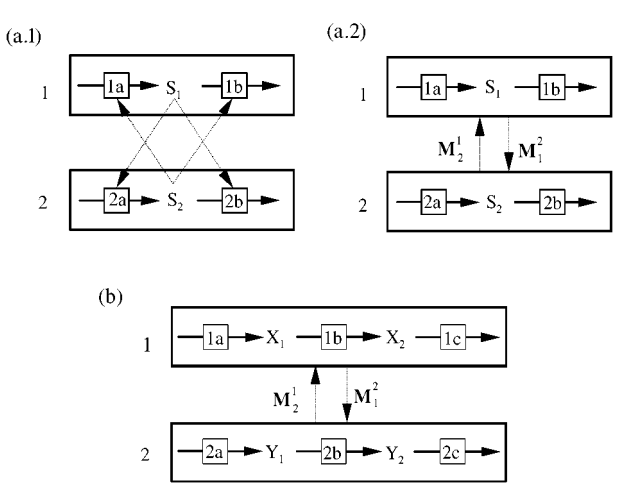

FIG. 1. Fully interacting two-module systems. System (a) contains one intermediate per module, while system (b) contains two intermediates per module. (a.1) shows explicitly all the interconnections between the modules, while in (a.2) and (b) the interconnections are shown as arrows labelled with the appropriate **M**-matrix (see text).

while that for module 2 is

$$\begin{bmatrix} C_{2a}^{J_2} & C_{2b}^{J_2} \\ C_{2a}^{s_2} & C_{2b}^{s_2} \end{bmatrix} \begin{bmatrix} 1 & -\varepsilon_{s_2}^{v_{2a}} \\ 1 & -\varepsilon_{s_2}^{v_{2b}} \end{bmatrix} = \begin{bmatrix} 1 & 0 \\ 0 & 1 \end{bmatrix}. \tag{4}$$

2.3. INTEGRAL CONTROL PROPERTIES OF THE COMPLETE MULTI-LEVEL SYSTEM

Being general, eqn (2) also applies to the whole multi-level system of interlinked modules. In order to distinguish between integral control coefficients that apply to the system as a whole and intramodular control coefficients that apply to an individual module in isolation (used in the previous section), we use the symbol G for integral control coefficients, while retaining the established symbol C for intramodular control coefficients. If $\mathbf{G}$ is the matrix of integral control coefficients with respect to the independent variables of the modules then eqn (2) is written as

$$\mathbf{GE} = \mathbf{I}. \tag{5}$$

For the two-module system in Fig. 1(a) this equation represents

$$\begin{bmatrix} G_{1a}^{J_1} & G_{1b}^{J_1} & G_{2a}^{J_1} & G_{2b}^{J_1} \\ G_{1a}^{J_2} & G_{1b}^{J_2} & G_{2a}^{J_2} & G_{2b}^{J_2} \\ G_{1a}^{s_1} & G_{1b}^{s_1} & G_{2a}^{s_1} & G_{2b}^{s_1} \\ G_{1a}^{s_2} & G_{1b}^{s_2} & G_{2a}^{s_2} & G_{2b}^{s_2} \end{bmatrix} \begin{bmatrix} 1 & 0 & -\varepsilon_{s_1}^{v_{1a}} & -\varepsilon_{s_2}^{v_{1a}} \\ 1 & 0 & -\varepsilon_{s_1}^{v_{1b}} & -\varepsilon_{s_2}^{v_{1b}} \\ 0 & 1 & -\varepsilon_{s_1}^{v_{2a}} & -\varepsilon_{s_2}^{v_{2a}} \\ 0 & 1 & -\varepsilon_{s_1}^{v_{2b}} & -\varepsilon_{s_2}^{v_{2b}} \end{bmatrix} = \begin{bmatrix} 1 & 0 & 0 & 0 \\ 0 & 1 & 0 & 0 \\ 0 & 0 & 1 & 0 \\ 0 & 0 & 0 & 1 \end{bmatrix}. \tag{6}$$

The first two columns of $\mathbf{E}$ form the $\mathscr{K}$-matrix; it can be partitioned to yield diagonal blocks (in the dotted frames) with zeros in the off-diagonal blocks. It is this property that makes the system multi-level (K-modular). The number of rows in each diagonal block corresponds to the number of steps in the corresponding module (here two).

It is always possible to re-arrange the rows of $\mathbf{G}$ and the columns of $\mathbf{E}$ in such a way that the control or elasticity coefficients of a module occur together in a block of the matrix. This allows the matrices to be partitioned as follows:

$$\begin{bmatrix} G_{1a}^{J_1} & G_{1b}^{J_1} & G_{2a}^{J_1} & G_{2b}^{J_1} \\ G_{1a}^{s_1} & G_{1b}^{s_1} & G_{2a}^{s_1} & G_{2b}^{s_1} \\ G_{1a}^{J_2} & G_{1b}^{J_2} & G_{2a}^{J_2} & G_{2b}^{J_2} \\ G_{1a}^{s_2} & G_{1b}^{s_2} & G_{2a}^{s_2} & G_{2b}^{s_2} \end{bmatrix} \begin{bmatrix} 1 & -\varepsilon_{s_1}^{v_{1a}} & 0 & -\varepsilon_{s_2}^{v_{1a}} \\ 1 & -\varepsilon_{s_1}^{v_{1b}} & 0 & -\varepsilon_{s_2}^{v_{1b}} \\ 0 & -\varepsilon_{s_1}^{v_{2a}} & 1 & -\varepsilon_{s_2}^{v_{2a}} \\ 0 & -\varepsilon_{s_1}^{v_{2b}} & 1 & -\varepsilon_{s_2}^{v_{2b}} \end{bmatrix} = \begin{bmatrix} 1 & 0 & 0 & 0 \\ 0 & 1 & 0 & 0 \\ 0 & 0 & 1 & 0 \\ 0 & 0 & 0 & 1 \end{bmatrix}, \tag{7}$$

which can be abbreviated to

$$\begin{bmatrix} \mathbf{G}_1^1 & \mathbf{G}_2^1 \\ \mathbf{G}_1^2 & \mathbf{G}_2^2 \end{bmatrix} \begin{bmatrix} \mathbf{E}_1^1 & \mathbf{E}_2^1 \\ \mathbf{E}_1^2 & \mathbf{E}_2^2 \end{bmatrix} = \begin{bmatrix} \mathbf{I} & \mathbf{0} \\ \mathbf{0} & \mathbf{I} \end{bmatrix}. \tag{8}$$

Here $\mathbf{G}_j^i$ is an integral control matrix for the independent variables in module i with respect to the steps in module j, and $\mathbf{E}_j^i$ is a matrix that includes elasticity coefficients for the reaction rates in module i with respect to the independent intermediates in module j. The diagonal matrices $\mathbf{G}_i^i$ and $\mathbf{E}_i^i$ are square. The off-diagonal matrices $\mathbf{G}_j^i$ and $\mathbf{E}_j^i$ (where $i \neq j$) can be rectangular; if rectangular, their dimensions will fulfill the requirements for multiplication of the matrices.

An important difference exists between the contents of the diagonal $\mathbf{E}_i^i$ and the off-diagonal $\mathbf{E}_j^i$ where $i \neq j$. $\mathbf{E}_i^i$ is a matrix that describes the structural properties ($\mathscr{K}_i$ and $\mathscr{L}_i$) and local kinetic step properties ($\boldsymbol{\varepsilon}$) of module i; it has the form given in the previous section: $[\mathscr{K}_i \quad -\boldsymbol{\varepsilon}\mathscr{L}_i]$, where the elasticity coefficients in $\boldsymbol{\varepsilon}$ are those of module i's rates with the respect to its own intermediates.

Where $i \neq j$, $\mathbf{E}_j^i$ is an *intermodular* elasticity matrix of the form $[\mathbf{0} \quad -\boldsymbol{\varepsilon}]$ where the elasticity coefficients are those of the rates of module i with respect to the intermediates in module j.

2.4. INTEGRAL CONTROL IN TERMS OF INTRAMODULAR CONTROL AND INTERMODULAR RESPONSE

Now that we have described the integral control-matrix equation for the full multi-level system we consider the following question: *Is it*

possible to express the integral control of a module on itself or on another module in terms of only intramodular control and intermodular response? If this can be done, it means that the integral control of a module can be deduced from experimental analysis of the intramodular control within isolated modules and of the responses of isolated modules to intermediates in other modules (which would serve as fixed parameters in such analyses).

The required transformation of eqn (5) is accomplished by first writing it in the form $\mathbf{EG} = \mathbf{I}$, which is permissible as both matrices as defined above are invertible, and then premultiplying both sides with the block-diagonal matrix $\mathbf{D}(\mathbf{C})$, which contains matrices of intramodular control coefficients on its diagonal. This gives

$$\mathbf{D}(\mathbf{C}) \cdot \mathbf{E} \cdot \mathbf{G} = \mathbf{D}(\mathbf{C}). \tag{9}$$

For the two-module system in Fig. 1 the equation would be

$$\begin{bmatrix} \mathbf{C}_1 & \mathbf{0} \\ \mathbf{0} & \mathbf{C}_2 \end{bmatrix} \begin{bmatrix} \mathbf{E}_1^1 & \mathbf{E}_2^1 \\ \mathbf{E}_1^2 & \mathbf{E}_2^2 \end{bmatrix} \begin{bmatrix} \mathbf{G}_1^1 & \mathbf{G}_2^1 \\ \mathbf{G}_1^2 & \mathbf{G}_2^2 \end{bmatrix} = \begin{bmatrix} \mathbf{C}_1 & \mathbf{0} \\ \mathbf{0} & \mathbf{C}_2 \end{bmatrix}. \tag{10}$$

The matrix multiplication $\mathbf{D}(\mathbf{C}) \cdot \mathbf{E}$ gives

$$\begin{bmatrix} \mathbf{C}_1\mathbf{E}_1^1 & \mathbf{C}_1\mathbf{E}_2^1 \\ \mathbf{C}_2\mathbf{E}_1^2 & \mathbf{C}_2\mathbf{E}_2^2 \end{bmatrix} \begin{bmatrix} \mathbf{G}_1^1 & \mathbf{G}_2^1 \\ \mathbf{G}_1^2 & \mathbf{G}_2^2 \end{bmatrix} = \begin{bmatrix} \mathbf{C}_1 & \mathbf{0} \\ \mathbf{0} & \mathbf{C}_2 \end{bmatrix}. \tag{11}$$

The matrix product $\mathbf{D}(\mathbf{C}) \cdot \mathbf{E}$ will always contain the submatrices $\mathbf{C}_i\mathbf{E}_i^i$ on its diagonal; according to eqn (2) these matrix products are equal to identity matrices, giving a diagonal of identity matrices, which can be thought of as describing the responses of the modules to themselves. The off-diagonal submatrices will be of the form $\mathbf{C}_i\mathbf{E}_j^i$; according to the partitioned response property of control analysis (Kacser *et al.*, 1995) such matrices contain response coefficients of independent variables in module i with respect to the independent intermediates in module j. In turn, each response coefficient is a sum of partial response coefficients (Kholodenko, 1988), one for each step through which the effect is mediated. As an example, consider the matrix product $\mathbf{C}_1\mathbf{E}_2^1$ for the system in Fig. 1(a):

$$\begin{bmatrix} C_{1a}^{J_1} & C_{1b}^{J_1} \\ C_{1a}^{S_1} & C_{1b}^{S_1} \end{bmatrix} \begin{bmatrix} 0 & -\varepsilon_{S_2}^{v_{1a}} \\ 0 & -\varepsilon_{S_2}^{v_{1b}} \end{bmatrix}$$

$$= \begin{bmatrix} 0 & -(C_{1a}^{J_1}\varepsilon_{S_2}^{v_{1a}} + C_{1b}^{J_1}\varepsilon_{S_2}^{v_{1b}}) \\ 0 & -(C_{1a}^{S_1}\varepsilon_{S_2}^{v_{1a}} + C_{1b}^{S_1}\varepsilon_{S_2}^{v_{1b}}) \end{bmatrix} \tag{12}$$

$$= \begin{bmatrix} 0 & -({}^{1a}R_{S_2}^{J_1} + {}^{1b}R_{S_2}^{J_1}) \\ 0 & -({}^{1a}R_{S_2}^{S_1} + {}^{1b}R_{S_2}^{S_1}) \end{bmatrix} \tag{13}$$

$$= \begin{bmatrix} 0 & -R_{S_2}^{J_1} \\ 0 & -R_{S_2}^{S_1} \end{bmatrix}. \tag{14}$$

The meaning of partial response coefficients is made clear in Fig. 2, where ${}^{1a}R_{S_2}^{S_1}$ and ${}^{1b}R_{S_2}^{S_1}$ are shown as examples. Each partial response coefficient can be seen to a combination of a local regulatory effect of S_2 on a step in the other module 1 and a systemic effect of that step on its own module.

The matrix $\mathbf{C}_i\mathbf{E}_j^i$, which we shall depict as $\mathbf{M}_j^i$, therefore contains the information on how the independent variables in module i respond to perturbations in the intermediate concentrations in module j. The product $\mathbf{D}(\mathbf{C}) \cdot \mathbf{E}$ can be therefore be designated the *intermodular response matrix* $\mathbf{M}$:

$$\mathbf{M} = \begin{bmatrix} \mathbf{I} & \mathbf{M}_2^1 \\ \mathbf{M}_1^2 & \mathbf{I} \end{bmatrix}. \tag{15}$$

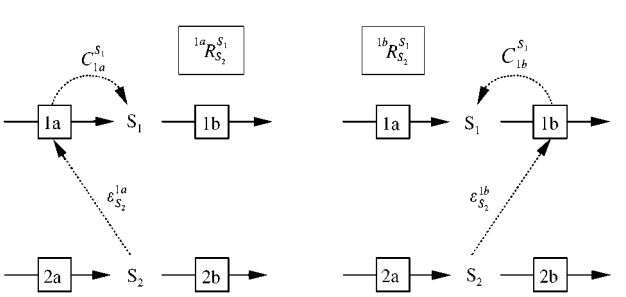

FIG. 2. A schematic representation of the partial response coefficients ${}^{1a}R_{S_2}^{S_1}$ and ${}^{1b}R_{S_2}^{S_1}$ that sum to form the intermodular response coefficient $R_{S_2}^{S_1}$. Whether they enhance or counteract each other depends on the signs of the elasticity and control coefficients. If, for example, both elasticity coefficients are positive and the control coefficients $C_{1a}^{S_1}$ and $C_{1b}^{S_1}$ are, respectively, positive and negative then the two partial response coefficients will have opposite signs and counteract each other.

As explained above, $\mathbf{M}$ also contains in the identity matrices the response of the modules to themselves.

It is important to realize that the intermodular response matrix $\mathbf{M}_j^i$ is defined in terms of the influence that module j would have on module i in the absence of all other intermodular effects, including the reciprocal effect of module i on module j. It is as if module i is considered in isolation but being subject to the same regulation by module j as in the whole system. In operational terms one can think of freezing the whole system in steady state, then unfreezing only module i and measuring its responses to changes in the intermediates of module j, which are now fixed and therefore parameters of module i.

Using the definition of $\mathbf{M} = \mathbf{D}(\mathbf{C}) \cdot \mathbf{E}$, the transformed control eqn (9) now becomes

$$\mathbf{MG} = \mathbf{D}(\mathbf{C}), \tag{16}$$

which, as $\mathbf{M}$ is invertible, can be re-arranged to

$$\mathbf{G} = \mathbf{M}^{-1} \cdot \mathbf{D}(\mathbf{C}). \tag{17}$$

As each intramodular control matrix $\mathbf{C}_i$ on the diagonal of $\mathbf{D}(\mathbf{C})$ can be written as $(\mathbf{E}_i^i)^{-1}$ [see eqn (2)], it follows that

$$\mathbf{G} = \mathbf{M}^{-1} \cdot \mathbf{D}(\mathbf{E})^{-1} = [\mathbf{D}(\mathbf{E}) \cdot \mathbf{M}]^{-1} \tag{18}$$

or

$$\mathbf{G} \cdot \mathbf{D}(\mathbf{E}) = \mathbf{M}^{-1}. \tag{19}$$

For the two-module system, eqns (17) and (19) would read

$$\begin{bmatrix} \mathbf{G}_1^1 & \mathbf{G}_2^1 \\ \mathbf{G}_1^2 & \mathbf{G}_2^2 \end{bmatrix} = \begin{bmatrix} \mathbf{I} & \mathbf{M}_2^1 \\ \mathbf{M}_1^2 & \mathbf{I} \end{bmatrix}^{-1} \begin{bmatrix} \mathbf{C}_1 & \mathbf{0} \\ \mathbf{0} & \mathbf{C}_2 \end{bmatrix} \tag{20}$$

and

$$\begin{bmatrix} \mathbf{G}_1^1 & \mathbf{G}_2^1 \\ \mathbf{G}_1^2 & \mathbf{G}_2^2 \end{bmatrix} \begin{bmatrix} \mathbf{E}_1^1 & \mathbf{0} \\ \mathbf{0} & \mathbf{E}_2^2 \end{bmatrix} = \begin{bmatrix} \mathbf{I} & \mathbf{M}_2^1 \\ \mathbf{M}_1^2 & \mathbf{I} \end{bmatrix}^{-1}. \tag{21}$$

If the off-diagonal matrices in $\mathbf{M}$ are zero (the modules do not affect each other), the off-diagonal matrices in $\mathbf{G}$ must also be zero, so that the equation describes the intramodular control of the individual modules; in this case integral control coefficients are equal to intramodular control coefficients.

In general, for the integral control coefficients of a single module (a block in $\mathbf{G}$), one can therefore write either

$$\mathbf{G}_i^j = (\mathbf{M}^{-1})_{ji} \mathbf{C}_i \tag{22}$$

or

$$\mathbf{G}_i^j \mathbf{E}_i^i = (\mathbf{M}^{-1})_{ji}, \tag{23}$$

where $(\mathbf{M}^{-1})_{ji}$ is the submatrix in row j and column i of $\mathbf{M}^{-1}$. When $i \neq j$ eqn (22) describes the integral control of the steps in module i on the steady-state variables in module j; when $i = j$ it describes the integral control of module i on its own steady-state variables, i.e. in the intact system.

In summary, we have expressed the integral control of a module on itself or on another module in terms of (i) the internal control of that module, and (ii) the response of each module to all other modules. The exact nature of this relationship will be explored in the next sections, but at this stage it is clear that the "whole" is the matrix ("interwoven") product of the parts and their interactions. Inversely, as shown in eqn (16), it is also possible to express internal control in terms of the integral control and the intermodular response. The expressions we obtained are analogous to the ones obtained in terms of non-normalized control and elasticity coefficients (Kahn & Westerhoff, 1991) and to the ones derived by Van der Gugten & Westerhoff (1997). Our introduction of the intermodular response matrix $\mathbf{M}$ allows us to illustrate most clearly the contribution made by the interaction between levels of cellular processes and how it relates to partial response coefficients.

Intramodular control $\mathbf{C}_i$ can be determined by studying each module in isolation, *in vitro*. The more elusive factor in integral control is $\mathbf{M}^{-1}$, the inverse of the intermodular response matrix. We now consider $\mathbf{M}^{-1}$ and its implications for integral control for two, three or more fully interacting modules. (By "fully interacting" we mean that any intermediate in any module affects all the rates of all other modules directly, i.e. all the rates potentially have non-zero elasticities for the intermediate; this is the completely general situation—in reality connections are usually much sparser.)

2.5. TWO FULLY INTERACTING MODULES

We consider the system in Fig. 1. By using the standard rules for manipulation of partitioned matrices (Gantmacher, 1960), the following expression for the inverse of $\mathbf{M}$ can be calculated by the traditional method of augmenting the matrix on the right with an identity matrix and then applying Gaussian elimination until the left-hand part is transformed into an identity matrix and the right-hand part contains the inverse:

$$\mathbf{M}^{-1} = \begin{bmatrix} \mathbf{I} & \mathbf{M}_2^1 \\ \mathbf{M}_1^2 & \mathbf{I} \end{bmatrix}^{-1} = \begin{bmatrix} (\mathbf{I} - \mathbf{M}_2^1\mathbf{M}_1^2)^{-1} & -\mathbf{M}_2^1(\mathbf{I} - \mathbf{M}_1^2\mathbf{M}_2^1)^{-1} \\ -\mathbf{M}_1^2(\mathbf{I} - \mathbf{M}_2^1\mathbf{M}_1^2)^{-1} & (\mathbf{I} - \mathbf{M}_1^2\mathbf{M}_2^1)^{-1} \end{bmatrix}. \tag{24}$$

Using eqn (20), the integral control coefficients of module i with respect to its own steady-state variables can therefore be expressed as

$$\mathbf{G}_i^i = (\mathbf{I} - \mathbf{M}_j^i\mathbf{M}_i^j)^{-1}\mathbf{C}_i, \tag{25}$$

while the control of the variables of module j by module i is

$$\mathbf{G}_i^j = -\mathbf{M}_i^j(\mathbf{I} - \mathbf{M}_j^i\mathbf{M}_i^j)^{-1}\mathbf{C}_i. \tag{26}$$

Using the relationship $\mathbf{C}_i = (\mathbf{E}_i^i)^{-1}$ the two expressions can also be recast as

$$\mathbf{G}_i^i\mathbf{E}_i^i = (\mathbf{I} - \mathbf{M}_j^i\mathbf{M}_i^j)^{-1}, \tag{27}$$

$$\mathbf{G}_i^j\mathbf{E}_i^i = -\mathbf{M}_i^j(\mathbf{I} - \mathbf{M}_j^i\mathbf{M}_i^j)^{-1}. \tag{28}$$

First, we consider the two-module system in Fig. 1(a) with only one intermediate in each module. To solve for the integral control coefficients in, say, $\mathbf{G}_1^1$ we first obtain the solution for $(\mathbf{I} - \mathbf{M}_2^1\mathbf{M}_1^2)^{-1}$

$$\left(\begin{bmatrix} 1 & 0 \\ 0 & 1 \end{bmatrix} - \begin{bmatrix} 0 & -R_{s_2}^{J_1} \\ 0 & -R_{s_2}^{s_1} \end{bmatrix}\begin{bmatrix} 0 & -R_{s_1}^{J_2} \\ 0 & -R_{s_1}^{s_2} \end{bmatrix}\right)^{-1} = \begin{bmatrix} 1 & -R_{s_2}^{J_1}R_{s_1}^{s_2} \\ 0 & 1 - R_{s_2}^{s_1}R_{s_1}^{s_2} \end{bmatrix}^{-1}. \tag{29}$$

This inverse can be calculated as

$$\begin{bmatrix} 1 & \dfrac{R_{s_2}^{J_1}R_{s_1}^{s_2}}{1 - R_{s_2}^{s_1}R_{s_1}^{s_2}} \\ 0 & \dfrac{1}{1 - R_{s_2}^{s_1}R_{s_1}^{s_2}} \end{bmatrix}. \tag{30}$$

As before, each of the response coefficients in the products $R_{s_2}^{J_1}R_{s_1}^{s_2}$ and $R_{s_2}^{s_1}R_{s_1}^{s_2}$ consists of a sum of partial response coefficients. When the expressions for the response coefficients are multiplied out they give sums of products of partial response coefficients. For example,

$$R_{s_2}^{J_1}R_{s_1}^{s_2} = ({}^{1a}R_{s_2}^{J_1} + {}^{1b}R_{s_2}^{J_1})({}^{2a}R_{s_1}^{s_2} + {}^{2b}R_{s_1}^{s_2}) \tag{31}$$

$$= {}^{1a}R_{s_2}^{J_1}\,{}^{2a}R_{s_1}^{s_2} + {}^{1a}R_{s_2}^{J_1}\,{}^{2b}R_{s_1}^{s_2} + {}^{1b}R_{s_2}^{J_1}\,{}^{2a}R_{s_1}^{s_2} + {}^{1b}R_{s_2}^{J_1}\,{}^{2b}R_{s_1}^{s_2}. \tag{32}$$

Each of these products describes a path of interactions from S_1 in module 1 via S_2 in module 2 back to J_1 in module 1. Together they describe the total intermodular effect of S_1 in module 1 on the flux J_1 through its own module, i.e. all the effect that involves module 2. It turns out that, in terms of control analysis, the total intermodular effect equals the arithmetic sum of the effects through the individual interaction paths. For $R_{s_2}^{J_1}R_{s_1}^{s_2}$ and $R_{s_2}^{s_1}R_{s_1}^{s_2}$ these interaction paths are schematically depicted in Figs 3 and 4, respectively. Depending on the values of the control and elasticity coefficients some effects will be positive and some negative.

Now, using eqn (25), the solution for $\mathbf{G}_1^1$ is obtained as

$$\begin{bmatrix} G_{1a}^{J_1} & G_{1b}^{J_1} \\ G_{1a}^{s_1} & G_{1b}^{s_1} \end{bmatrix} = \begin{bmatrix} 1 & \dfrac{R_{s_2}^{J_1}R_{s_1}^{s_2}}{1 - R_{s_2}^{s_1}R_{s_1}^{s_2}} \\ 0 & \dfrac{1}{1 - R_{s_2}^{s_1}R_{s_1}^{s_2}} \end{bmatrix} \begin{bmatrix} C_{1a}^{J_1} & C_{1b}^{J_1} \\ C_{1a}^{s_1} & C_{1b}^{s_1} \end{bmatrix} \tag{33}$$

$$= \begin{bmatrix} C_{1a}^{J_1} + \left(\dfrac{R_{s_2}^{J_1}R_{s_1}^{s_2}}{1 - R_{s_2}^{s_1}R_{s_1}^{s_2}}\right)C_{1a}^{s_1} & C_{1b}^{J_1} + \left(\dfrac{R_{s_2}^{J_1}R_{s_1}^{s_2}}{1 - R_{s_2}^{s_1}R_{s_1}^{s_2}}\right)C_{1b}^{s_1} \\ \left(\dfrac{1}{1 - R_{s_2}^{s_1}R_{s_1}^{s_2}}\right)C_{1a}^{s_1} & \left(\dfrac{1}{1 - R_{s_2}^{s_1}R_{s_1}^{s_2}}\right)C_{1b}^{s_1} \end{bmatrix}. \tag{34}$$

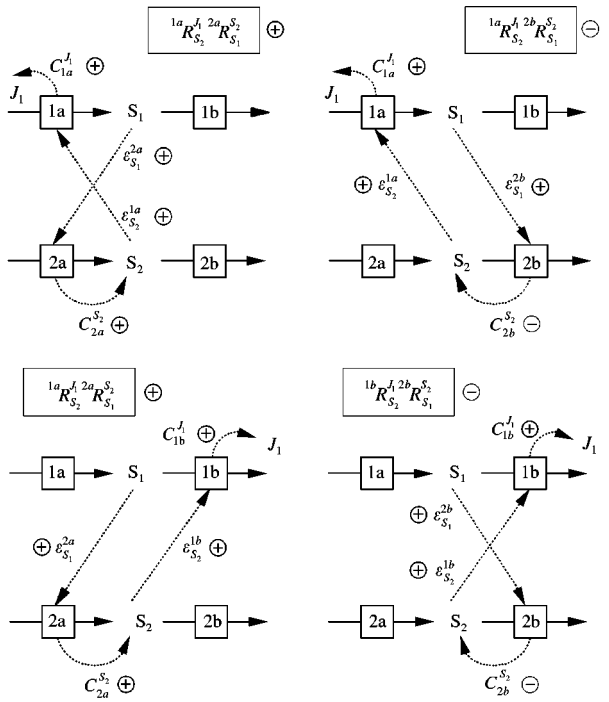

FIG. 3. A schematic representation of the four products of partial response coefficients that sum to form the product of intermodular response coefficients $R_{s_2}^{J_1}R_{s_1}^{s_2}$. Each product describes a path of interactions from S_1 to J_1. In order to understand how these paths enhance or counteract each other typical signs are shown for the elasticity and control coefficients, and for the products of partial response coefficients.

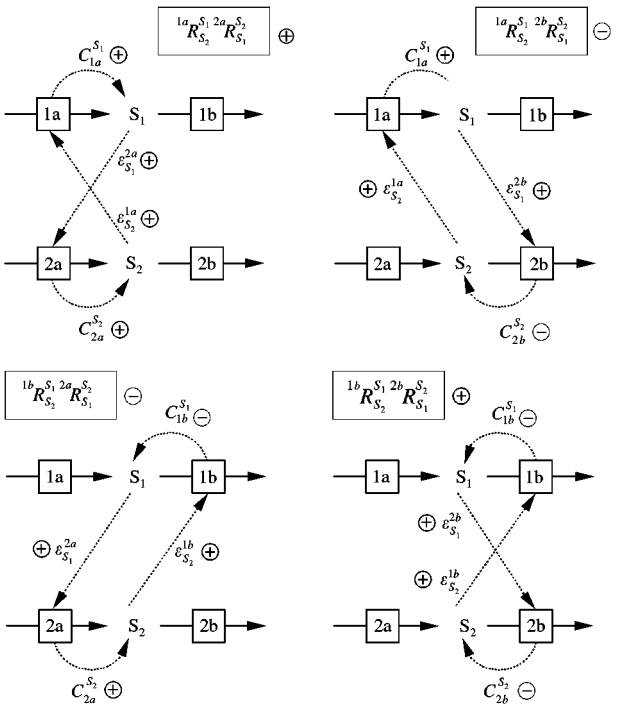

FIG. 4. A schematic representation of the four products of partial response coefficients that sum to form the product of intermodular response coefficients $R_{s_2}^{s_1}R_{s_1}^{s_2}$. Each product describes a path of interactions from S_1 back to itself. In order to understand how these paths enhance or counteract each other typical signs are shown for the elasticity and control coefficients, and for the products of partial response coefficients.

How should we interpret these equations in physical terms? Consider one of these expressions:

$$G_{1a}^{J_1} = C_{1a}^{J_1} + \left(\frac{R_{s_2}^{J_1}R_{s_1}^{s_2}}{1 - R_{s_2}^{s_1}R_{s_1}^{s_2}}\right)C_{1a}^{s_1}. \qquad (35)$$

This equation shows that the control exerted by step 1a on its own steady-state flux, i.e. $G_{1a}^{J_1}$, depends on whether its module 1 occurs in isolation or connected to module 2. If module 1 is isolated, the response coefficients $R_{s_2}^{J_1}$ and $R_{s_2}^{s_1}$ are zero and $G_{1a}^{J_1}$ equals the classical intramodular control coefficient $C_{1a}^{J_1}$. If module 1 is connected to module 2, the final effect of a modulation of step 1a on J_1 is shown to be a linear sum, a superposition, of the individual contributions of the intramodular effect and an intermodular effect as follows: When the rate of step 1a is perturbed it causes a change in the steady-state values of both the flux J_1 and the concentration s_1; the magnitude of these changes are quantified by the control coefficients $C_{1a}^{J_1}$ and $C_{1a}^{s_1}$. However, S_1 is an effector of module 2 so that a change in its concentration will affect the steady-state concentration of S_2 to a degree given by $R_{s_1}^{s_2}$. But, reciprocally, S_2 is an effector of module 1 and will in turn cause an additional effect on J_1 of magnitude $R_{s_2}^{J_1}$. This chain of effects from step 1a to J_1 is quantified by the product $R_{s_2}^{J_1}R_{s_1}^{s_2}C_{1a}^{s_1}$. The numerator $R_{s_2}^{J_1}R_{s_1}^{s_2}$ of the intermodular response term (the bracketed expression) therefore has a clear interpretation as the effect of S_1 on its own flux J_1 via S_2 in the other module.

There is, however, one more effect that has not yet been accounted for: S_1 not only affects J_1 via S_2, it also affects *itself* via S_2. The magnitude of this effect is given by the response $R_{s_2}^{s_1}R_{s_1}^{s_2}$, which can be regarded as quantifying a *circular reverberation effect* (note that it can also be written as $R_{s_1}^{s_2}R_{s_2}^{s_1}$, i.e. the effect of S_2 on itself via S_1). If this response is greater than zero it should enhance

$R_{s_2}^{J_1} R_{s_1}^{s_2}$, if less than zero it should attenuate it, and if equal to zero it should not affect it. The denominator $(1 - R_{s_2}^{s_1} R_{s_1}^{s_2})$ incorporates these effects into the expression: the denominator $(1 - R_{s_2}^{s_1} R_{s_1}^{s_2})$ becomes less than 1 when $R_{s_2}^{s_1} R_{s_1}^{s_2} > 0$; it becomes greater than 1 when $R_{s_2}^{s_1} R_{s_1}^{s_2} < 0$, and it equals 1 when $R_{s_2}^{s_1} R_{s_1}^{s_2} = 0$. Once again, this demonstrates the power of control analysis to unravel the multitude of interaction chains that reverberate through the system following a perturbation.

In the extreme, when $R_{s_2}^{s_1} R_{s_1}^{s_2} \to 1$, the denominator $(1 - R_{s_2}^{s_1} R_{s_1}^{s_2}) \to 0$, so that the whole intermodular response term becomes infinitely large and the system has no defined steady state. In this sense circular reverberation terms such as $R_{s_2}^{s_1} R_{s_1}^{s_2}$ make the system more (when less than 0) or less (when greater than 0) structurally stable.

The expression for the concentration coefficients, for example,

$$G_{1a}^{s_1} = \frac{1}{1 - R_{s_2}^{s_1} R_{s_1}^{s_2}} C_{1a}^{s_1}, \tag{36}$$

yields the same type of physical interpretation: a modulation in step 1a has an intramodular effect on s_1 quantified by $C_{1a}^{s_1}$; S_1, however, also affects its own concentration via S_2, which, as before, is accounted for by the circular reverberation term in the denominator. From a regulatory point of view, the circular reverberation term would enhance homeostasis of s_1 (when less than 0) or decrease its homeostasis (when greater than 0).

As an example of the integral effect of one module on another, $\mathbf{G}_1^2$ can be solved from eqn (26) as

$$\begin{bmatrix} G_{1a}^{J_2} & G_{1b}^{J_2} \\ G_{1a}^{s_2} & G_{1b}^{s_2} \end{bmatrix} = -\begin{bmatrix} 0 & -R_{s_1}^{J_2} \\ 0 & -R_{s_1}^{s_2} \end{bmatrix} \times \begin{bmatrix} 1 & \dfrac{R_{s_2}^{J_1} R_{s_1}^{s_2}}{1 - R_{s_2}^{s_1} R_{s_1}^{s_2}} \\ 0 & \dfrac{1}{1 - R_{s_2}^{s_1} R_{s_1}^{s_2}} \end{bmatrix} \begin{bmatrix} C_{1a}^{J_1} & C_{1b}^{J_1} \\ C_{1a}^{s_1} & C_{1b}^{s_1} \end{bmatrix} \tag{37}$$

$$= \begin{bmatrix} \left(\dfrac{R_{s_1}^{J_2}}{1 - R_{s_2}^{s_1} R_{s_1}^{s_2}}\right) C_{1a}^{s_1} & \left(\dfrac{R_{s_1}^{J_2}}{1 - R_{s_2}^{s_1} R_{s_1}^{s_2}}\right) C_{1b}^{s_1} \\ \left(\dfrac{R_{s_1}^{s_2}}{1 - R_{s_2}^{s_1} R_{s_1}^{s_2}}\right) C_{1a}^{s_1} & \left(\dfrac{R_{s_1}^{s_2}}{1 - R_{s_2}^{s_1} R_{s_1}^{s_2}}\right) C_{1b}^{s_1} \end{bmatrix}. \tag{38}$$

Here it is recognized that, in contrast to control by a step of a flux or concentration in its own module, the control of a steady-state variable in another module depends completely on the interaction between the modules (e.g. $G_{1a}^{J_2} = 0$ when $R_{s_1}^{J_2} = 0$). The control that occurs in the presence of the intermodular response is understood readily. For instance, the control of step 1a on flux J_2 is given by the control of 1a on s_1 multiplied by the response of J_2 to s_1 and modified by the reverberation term in $(1 - R_{s_2}^{s_1} R_{s_1}^{s_2})$.

Note that in all the expressions of eqns (34) and (38) the intermodular response terms consist of a response path to the variable in question multiplied by the function $1/(1 - R_{s_2}^{s_1} R_{s_1}^{s_2})$ that contains only circular reverberation terms. This function will be called the *reverberation function*. As will become clear in the next examples, the numerator of a reverberation function is not necessarily one, but can also contain one or more reverberation terms from the denominator.

Up to now the internal structure of each module has consisted only of two reactions coupled by one common intermediate. Because concentrations are the only possible mediators in the communication between a module and other modules, this kept the analysis relatively simple. If there is more than one intermediate in a module, the possible routes for communication in a fully interacting system proliferate and the general expressions for the integral control coefficients become much more complex. Consider the two-module system in Fig. 1(b) where each module contains two intermediates. The matrix $(\mathbf{I} - \mathbf{M}_2^1 \mathbf{M}_1^2)^{-1}$ now becomes

$$\begin{bmatrix} 1 & -(R_{y_1}^{J_1} R_{x_1}^{y_1} + R_{y_2}^{J_1} R_{x_1}^{y_2}) & -(R_{y_1}^{J_1} R_{x_2}^{y_1} + R_{y_2}^{J_1} R_{x_2}^{y_2}) \\ 0 & 1 - (R_{y_1}^{x_1} R_{x_1}^{y_1} + R_{y_2}^{x_1} R_{x_1}^{y_2}) & -(R_{y_1}^{x_1} R_{x_2}^{y_1} + R_{y_2}^{x_1} R_{x_2}^{y_2}) \\ 0 & -(R_{y_1}^{x_2} R_{x_1}^{y_1} + R_{y_2}^{x_2} R_{x_1}^{y_2}) & 1 - (R_{y_1}^{x_2} R_{x_2}^{y_1} + R_{y_2}^{x_2} R_{x_2}^{y_2}) \end{bmatrix}^{-1}. \tag{39}$$

All the bracketed products of response coefficients describe a chain of effects from a module back to itself, i.e. each of them proceeds from an intermediate in one module via the other module back either to the same intermediate or to another variable in the first module. For example, $R_{y_1}^{J_1} R_{x_1}^{y_1}$ and $R_{y_2}^{J_1} R_{x_1}^{y_2}$ describe the effect chains $X_1 \to Y_1 \to J_1$ and $X_1 \to Y_2 \to J_1$. The sum of the

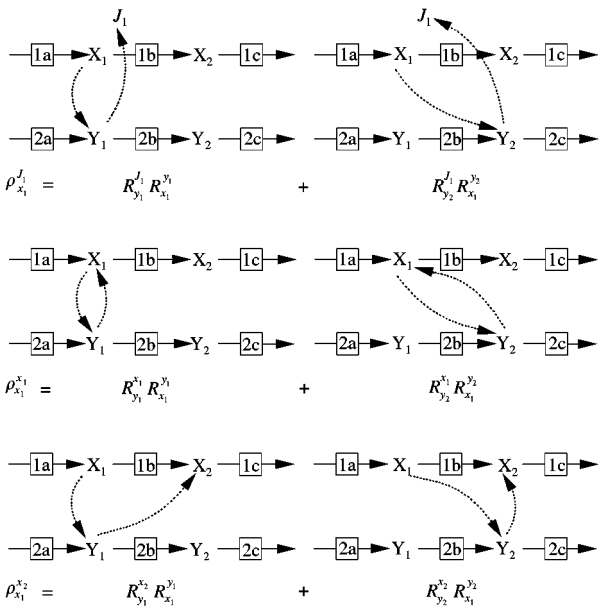

FIG. 5. The components of the overall intermodular responses of the steady-state variables of module 1 in Fig. 1(b) to one of its own intermediates X_1. These terms arise in the second column of the matrix in eqn (39).

two effects can be regarded as the total response of J_1 to x_1 via the parts of the system outside module 1, in this case module 2; we can write this response as $\rho_{x_1}^{J_1}$. Similarly $(R_{y_1}^{x_1} R_{x_1}^{y_1} + R_{y_2}^{x_1} R_{x_1}^{y_2})$ is $\rho_{x_1}^{x_1}$, the effect of x_1 on itself via the intermediates of module 2. Figure 5 depicts these summed responses diagrammatically, using $\rho_{x_1}^{J_1}$, $\rho_{x_1}^{x_1}$, and $\rho_{x_1}^{x_2}$ as examples. The total responses to x_2 are written as $\rho_{x_2}^{J_1}$, $\rho_{x_2}^{x_1}$, and $\rho_{x_2}^{x_2}$. Using this symbolism, the matrix in eqn (39) is

$$\begin{bmatrix} 1 & -\rho_{x_1}^{J_1} & -\rho_{x_2}^{J_1} \\ 0 & 1-\rho_{x_1}^{x_1} & -\rho_{x_2}^{x_1} \\ 0 & -\rho_{x_1}^{x_2} & 1-\rho_{x_2}^{x_2} \end{bmatrix}^{-1} = \begin{bmatrix} 1 & \dfrac{\rho_{x_1}^{J_1}(1-\rho_{x_2}^{x_2}) + \rho_{x_2}^{J_1}\rho_{x_1}^{x_2}}{\Delta} & \dfrac{\rho_{x_2}^{J_1}(1-\rho_{x_1}^{x_1}) + \rho_{x_1}^{J_1}\rho_{x_2}^{x_1}}{\Delta} \\ 0 & \dfrac{1-\rho_{x_2}^{x_2}}{\Delta} & \dfrac{\rho_{x_2}^{x_1}}{\Delta} \\ 0 & \dfrac{\rho_{x_1}^{x_2}}{\Delta} & \dfrac{1-\rho_{x_1}^{x_1}}{\Delta} \end{bmatrix}, \tag{40}$$

where the determinant

$$\Delta = (1-\rho_{x_1}^{x_1})(1-\rho_{x_2}^{x_2}) - \rho_{x_2}^{x_1}\rho_{x_1}^{x_2}. \tag{41}$$

Using this result, the following is a representative example of an expression for a flux-control coefficient in $\mathbf{G}_1^1$:

$$G_{1a}^{J_1} = C_{1a}^{J_1} + \frac{\rho_{x_1}^{J_1}(1-\rho_{x_2}^{x_2}) + \rho_{x_2}^{J_1}\rho_{x_1}^{x_2}}{(1-\rho_{x_1}^{x_1})(1-\rho_{x_2}^{x_2}) - \rho_{x_2}^{x_1}\rho_{x_1}^{x_2}} C_{1a}^{x_1} + \frac{\rho_{x_2}^{J_1}(1-\rho_{x_1}^{x_1}) + \rho_{x_1}^{J_1}\rho_{x_2}^{x_1}}{(1-\rho_{x_1}^{x_1})(1-\rho_{x_2}^{x_2}) - \rho_{x_1}^{x_2}\rho_{x_2}^{x_1}} C_{1a}^{x_2}. \tag{42}$$

As in eqn (35), the expression consists of the flux-control coefficient $C_{1a}^{J_1}$, which quantifies the intramodular effect of a modulation of step 1a on flux J_1, plus terms that quantify the effects on J_1 via x_1 and x_2. Each of the latter terms consists of the intramodular concentration-control coefficient of 1a multiplied by an intermodular response function. In order to interpret this response function physically, we split it up according to the numerator terms and consider each one separately as a product of an intermodular response path and a reverberation function. For example, the left-hand response function consists of the product of the response path $\rho_{x_1}^{J_1}$ and the reverberation function

$$\frac{1-\rho_{x_2}^{x_2}}{(1-\rho_{x_1}^{x_1})(1-\rho_{x_2}^{x_2}) - \rho_{x_2}^{x_1}\rho_{x_1}^{x_2}} \tag{43}$$

plus the product of the response path $\rho_{x_2}^{J_1}\rho_{x_1}^{x_2}$ and the reverberation function

$$\frac{1}{(1-\rho_{x_1}^{x_1})(1-\rho_{x_2}^{x_2}) - \rho_{x_2}^{x_1}\rho_{x_1}^{x_2}}. \tag{44}$$

Note the difference between the two reverberation functions: The response path $\rho_{x_1}^{J_1}$ does not traverse X_2 and the reverberation term that contains only X_2 appears in the numerator. The response path $\rho_{x_2}^{J_1}\rho_{x_1}^{x_2}$ traverses both X_1 and X_2 and no reverberation terms appear in the numerator. This property of the numerator of a reverberation function, i.e. containing only reverberation terms of intermediates not

traversed by the response path, turns out to be general. Table 1 gives the intermodular response term for J_1 to X_1 if there were a third intermediate X_3 in module 1 (derivation not shown). The response path $\rho_{x_1}^{J_1}$ is multiplied by reverberation terms that traverse only X_2 and X_3. Similarly, the response path $\rho_{x_3}^{J_1}\rho_{x_1}^{x_3}$, which traverses both X_1 and X_3, is multiplied by reverberation terms that traverse only X_2. For $\rho_{x_2}^{J_1}\rho_{x_1}^{x_2}$ it is X_3. The last two response paths traverse all three X-intermediates and their reverberation function has a numerator of 1. Note that reverberation terms in the denominator that do not traverse all intermediates are also multiplied by terms that contain non-traversed intermediates.

The reverberation terms that appear in the numerator counteract their effect in the denominator. The larger they are in relation to the other reverberation terms the more the whole reverberation function tends to one, and, hence, becomes inconsequential. If they appeared only in the denominator (i.e. if the numerator of the reverberation function were (1) they would drive the reverberation function away from 1 either towards zero (if they were negative) or towards infinity (if they were positive). Therefore, their appearance in the numerator partly nullifies any stabilizing (homeostatic) or destabilizing (amplifying) effect they would have had, had they only appeared in the denominator.

The following re-arrangement of the intermodular response terms in eqn (42) allows for a complementary physical interpretation:

$$G_{1a}^{J_1} = C_{1a}^{J_1} + \frac{\rho_{x_1}^{J_1} + \rho_{x_2}^{J_1}\rho_{x_1}^{x_2}/(1-\rho_{x_2}^{x_2})}{1-\rho_{x_1}^{x_1} - \rho_{x_2}^{x_1}\rho_{x_1}^{x_2}/(1-\rho_{x_2}^{x_2})} C_{1a}^{x_1}$$

$$+ \frac{\rho_{x_2}^{J_1} + \rho_{x_1}^{J_1}\rho_{x_2}^{x_1}/(1-\rho_{x_1}^{x_1})}{1-\rho_{x_2}^{x_2} - \rho_{x_1}^{x_2}\rho_{x_2}^{x_1}/(1-\rho_{x_1}^{x_1})} C_{1a}^{x_2}. \quad (45)$$

TABLE 1

Numerator terms of the intermodular response function that multiplies $C_{1a}^{x_1}$		Denominator, Δ, terms of the reverberation functions
Intermodular response path	Numerator of the reverberation function	
$\rho_{x_1}^{J_1}$	$[(1-\rho_{x_2}^{x_2})(1-\rho_{x_3}^{x_3}) - \rho_{x_3}^{x_2}\rho_{x_2}^{x_3}]$	$(1-\rho_{x_1}^{x_1})(1-\rho_{x_2}^{x_2})(1-\rho_{x_3}^{x_3})$
		$-\rho_{x_3}^{x_2}\rho_{x_2}^{x_3}(1-\rho_{x_1}^{x_1})$
$+\rho_{x_3}^{J_1}\rho_{x_1}^{x_3}$	$(1-\rho_{x_2}^{x_2})$	$-\rho_{x_3}^{x_1}\rho_{x_1}^{x_3}(1-\rho_{x_2}^{x_2})$
$+\rho_{x_2}^{J_1}\rho_{x_1}^{x_2}$	$(1-\rho_{x_3}^{x_3})$	$-\rho_{x_2}^{x_1}\rho_{x_1}^{x_2}(1-\rho_{x_3}^{x_3})$
$+\rho_{x_3}^{J_1}\rho_{x_2}^{x_3}\rho_{x_1}^{x_2}$	(1)	$-\rho_{x_3}^{x_1}\rho_{x_2}^{x_3}\rho_{x_1}^{x_2}$
$+\rho_{x_2}^{J_1}\rho_{x_3}^{x_2}\rho_{x_1}^{x_3}$	(1)	$-\rho_{x_2}^{x_1}\rho_{x_3}^{x_2}\rho_{x_1}^{x_3}$

The numerator terms describe the effect of an intermediate in module 1 (X_1 or X_2) on J_1, via, of course, the intermediates in module 2. For example, in the intermodular response term that modifies $C_{1a}^{x_1}$, $\rho_{x_1}^{J_1}$ is the direct effect, while $\rho_{x_2}^{J_1}\rho_{x_1}^{x_2}$ is the effect via X_2, i.e. the effect of X_1 on X_2 via module 2 and then of X_2 on J_1 again via module 2. However, because X_2 can also affect itself via module 2 the $1/(1-\rho_{x_2}^{x_2})$ reverberation function appears as a modifier of $\rho_{x_2}^{J_1}\rho_{x_1}^{x_2}$. The denominator contains the circular reverberation terms for X_1; $\rho_{x_1}^{x_1}$ is the direct effect, while the $\rho_{x_2}^{x_1}\rho_{x_1}^{x_2}$ is the effect via X_2, again modified by $1/(1-\rho_{x_2}^{x_2})$ for the same reason as above. The intermodular response term that modifies $C_{1a}^{x_2}$ yields the same interpretation, as do those given above for the system with three X-intermediates.

Finally, a diagrammatic view of the intermodular response patterns yields further insight. The numerator and denominator terms of the intermodular response functions in eqn (42) can

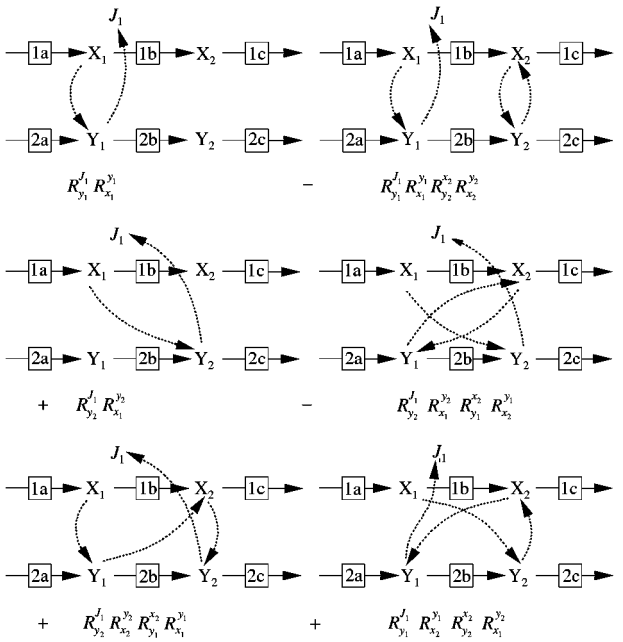

FIG. 6. The intermodular J_1-response patterns to a change in x_1 that result from expansion and simplification of the numerator of eqn (42). The two patterns preceded by a minus sign counteract those preceded by a plus sign.

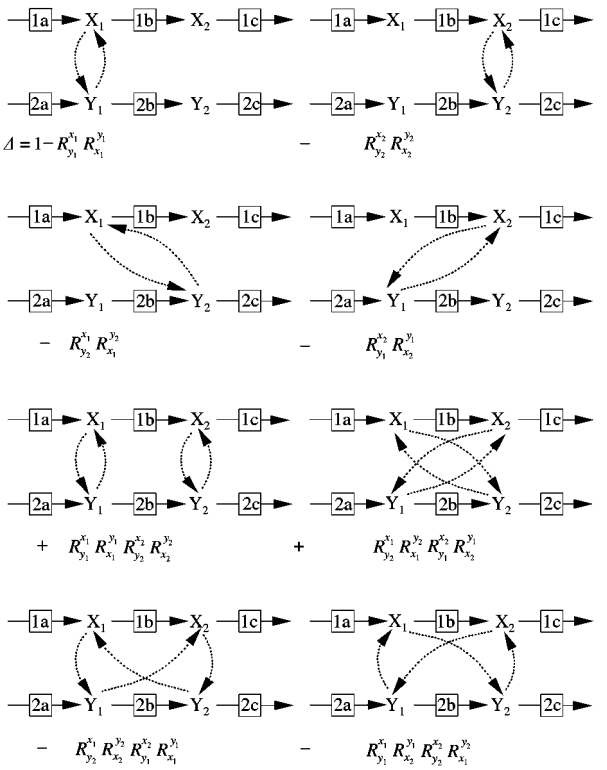

FIG. 7. The intermodular x_1-response patterns to a change in x_1 that result from expansion and simplification of the denominator of eqn (42). The two patterns preceded by a plus sign counteract those preceded by a minus sign.

be expanded using the expressions in eqn (39) and simplified; the terms that remain are depicted diagrammatically in Figs 6 and 7. In both numerator and denominator there are terms that cancel; they are depicted in Fig. 8. The only terms that need comment are the two terms in Figs 6 and 7 that differ from the others in that their signs are the opposite of their partners' signs, i.e. working against the trend. Furthermore, they all consist of a combination of two unconnected cyclic interaction patterns, whereas all the other terms consist of one cycle.

A representative example of an expression for concentration control coefficients in $\mathbf{G}_1^1$ is

$$G_{1a}^{x_1} = \frac{1-\rho_{x_2}^{x_2}}{(1-\rho_{x_1}^{x_1})(1-\rho_{x_2}^{x_2})-\rho_{x_2}^{x_1}\rho_{x_1}^{x_2}} C_{1a}^{x_1} + \frac{\rho_{x_2}^{x_1}}{(1-\rho_{x_1}^{x_1})(1-\rho_{x_2}^{x_2})-\rho_{x_1}^{x_2}\rho_{x_2}^{x_1}} C_{1a}^{x_2}, \quad (46)$$

which, for the sake of interpretation (which is now left to the reader), can be re-arranged as

$$G_{1a}^{x_1} = \frac{1}{1-\rho_{x_1}^{x_1}-\rho_{x_2}^{x_1}\rho_{x_1}^{x_2}/(1-\rho_{x_2}^{x_2})} C_{1a}^{x_1} + \frac{\rho_{x_2}^{x_1}/(1-\rho_{x_1}^{x_1})}{1-\rho_{x_2}^{x_2}-\rho_{x_1}^{x_2}\rho_{x_2}^{x_1}/(1-\rho_{x_1}^{x_1})} C_{1a}^{x_2}. \quad (47)$$

$\mathbf{G}_1^2$ control coefficients of any variable j in module 2 (i.e. J_2, y_1, or y_2) with respect to any step i in module 1 have the following form:

$$G_i^j = \frac{\rho_{x_1}^j + \rho_{x_2}^j\rho_{x_1}^{x_2}/(1-\rho_{x_2}^{x_2})}{1-\rho_{x_1}^{x_1}-\rho_{x_2}^{x_1}\rho_{x_1}^{x_2}/(1-\rho_{x_2}^{x_2})} C_i^{x_1} + \frac{\rho_{x_2}^j + \rho_{x_1}^j\rho_{x_2}^{x_2}/(1-\rho_{x_1}^{x_1})}{1-\rho_{x_2}^{x_2}-\rho_{x_1}^{x_2}\rho_{x_2}^{x_1}/(1-\rho_{x_1}^{x_1})} C_i^{x_2}. \quad (48)$$

The interpretation of the intermodular response terms follows the same pattern as that given above for the expressions for the $\mathbf{G}_1^1$ coefficients.

2.6. FULLY INTERACTING MODULES OF ORDER 3 AND HIGHER

Although it is obvious that the explicit expressions for integral control coefficients in systems

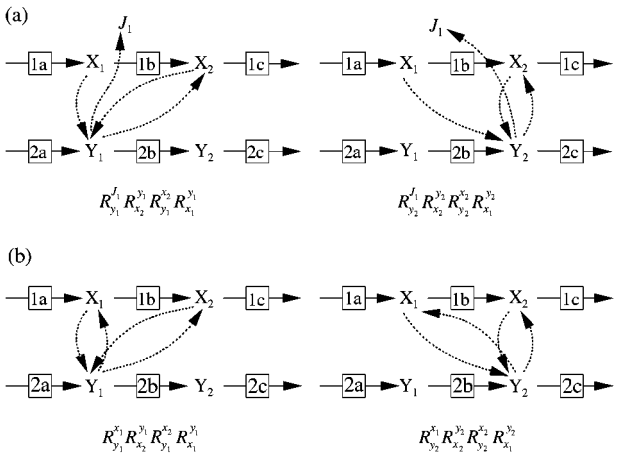

FIG. 8. The intermodular J_1 and x_1-response patterns to a change in x_1 that cancel during expansion and simplification of the numerator and denominator of eqn (42).

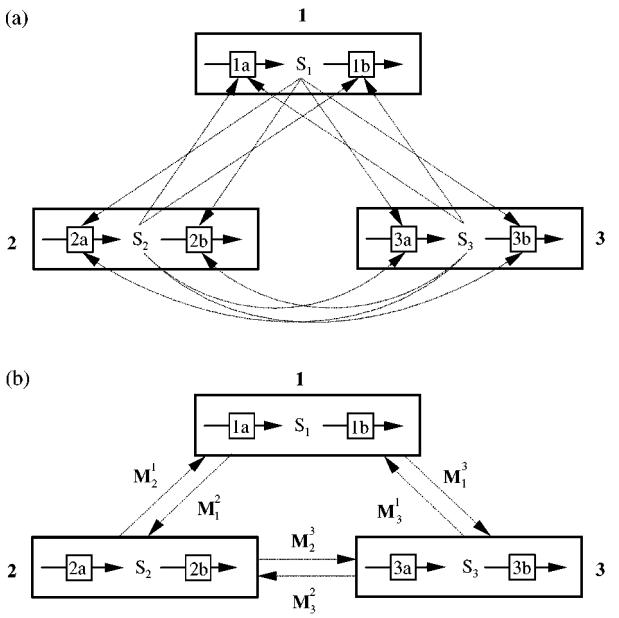

FIG. 9. A fully interacting three-module system. (a) shows explicitly all the interconnections between the modules, while in (b) the interconnections are shown as arrows labelled with the appropriate **M**-matrix (see text).

consisting of three or more fully interacting modules must become increasingly complex as the number of modules increase, they can in principle be obtained for any fully interacting system with n modules by means of the recursive algorithm described in Appendix A.

In this section, we describe and analyse the solution of a system consisting of three fully interacting modules, while the solution of the four-module system is obtained in Appendix A as an example of the application of the algorithm.

The inverse of the **M**-matrix for the system in Fig. 9,

$$\mathbf{M}^{-1} = \begin{bmatrix} \mathbf{I} & \mathbf{M}_2^1 & \mathbf{M}_3^1 \\ \mathbf{M}_1^2 & \mathbf{I} & \mathbf{M}_3^2 \\ \mathbf{M}_1^3 & \mathbf{M}_2^3 & \mathbf{I} \end{bmatrix}^{-1}, \tag{49}$$

was obtained as described for the $n = 2$ system. From the elements of $\mathbf{M}^{-1}$ the expressions for the integral control of one module on itself or on other modules follow:

$$\mathbf{G}_i^i = \Delta^{-1}\mathbf{C}_i, \tag{50}$$

$$\mathbf{G}_i^j = -(\mathbf{I} - \mathbf{M}_k^j\mathbf{M}_j^k)^{-1}(\mathbf{M}_i^j - \mathbf{M}_k^j\mathbf{M}_i^k)\Delta^{-1}\mathbf{C}_i, \tag{51}$$

where

$$\Delta = (\mathbf{I} - \mathbf{M}_k^i\mathbf{M}_i^k) - (\mathbf{M}_j^i - \mathbf{M}_k^i\mathbf{M}_j^k)$$

$$\times(\mathbf{I} - \mathbf{M}_k^j\mathbf{M}_j^k)^{-1}(\mathbf{M}_i^j - \mathbf{M}_k^j\mathbf{M}_i^k). \tag{52}$$

Let us examine a specific case in order to obtain more insight on what the products of **M**-matrices in the solution mean. Consider the effect of module 1 on its own independent variables:

$$\mathbf{G}_1^1 = [\mathbf{I} - \mathbf{M}_3^1\mathbf{M}_1^3 - (\mathbf{M}_2^1 - \mathbf{M}_3^1\mathbf{M}_2^3)$$
$$\times(\mathbf{I} - \mathbf{M}_3^2\mathbf{M}_2^3)^{-1}(\mathbf{M}_1^2 - \mathbf{M}_3^2\mathbf{M}_1^3)]^{-1}\mathbf{C}_1. \tag{53}$$

If the whole bracketed expression is multiplied out we again obtain a matrix of the form in eqn (30) from which we calculate

$$\begin{bmatrix} G_{1a}^{J_1} & G_{1b}^{J_1} \\ G_{1a}^{s_1} & G_{1b}^{s_1} \end{bmatrix} = \begin{bmatrix} C_{1a}^{J_1} + \dfrac{\alpha}{\Delta}C_{1a}^{s_1} & C_{1b}^{J_1} + \dfrac{\alpha}{\Delta}C_{1b}^{s_1} \\ \dfrac{\beta}{\Delta}C_{1a}^{s_1} & \dfrac{\beta}{\Delta}C_{1b}^{s_1} \end{bmatrix}, \tag{54}$$

where

$$\frac{\alpha}{\Delta} = \frac{R_{s_2}^{J_1} R_{s_1}^{s_2} + R_{s_3}^{J_1} R_{s_1}^{s_3} + R_{s_3}^{J_1} R_{s_2}^{s_3} R_{s_1}^{s_2} + R_{s_2}^{J_1} R_{s_3}^{s_2} R_{s_1}^{s_3}}{1 - R_{s_2}^{s_1} R_{s_1}^{s_2} - R_{s_3}^{s_1} R_{s_1}^{s_3} - R_{s_3}^{s_2} R_{s_2}^{s_3} - R_{s_3}^{s_1} R_{s_2}^{s_3} R_{s_1}^{s_2} - R_{s_2}^{s_1} R_{s_3}^{s_2} R_{s_1}^{s_3}} \tag{55}$$

and

$$\frac{\beta}{\Delta} = \frac{1 - R_{s_3}^{s_2} R_{s_2}^{s_3}}{1 - R_{s_2}^{s_1} R_{s_1}^{s_2} - R_{s_3}^{s_1} R_{s_1}^{s_3} - R_{s_3}^{s_2} R_{s_2}^{s_3} - R_{s_3}^{s_1} R_{s_2}^{s_3} R_{s_1}^{s_2} - R_{s_2}^{s_1} R_{s_3}^{s_2} R_{s_1}^{s_3}}. \tag{56}$$

Similarly, we can obtain the solution for, say, $\mathbf{G}_1^2$ as

$$\begin{bmatrix} G_{1a}^{J_2} & G_{1b}^{J_2} \\ G_{1a}^{s_2} & G_{1b}^{s_2} \end{bmatrix} = \begin{bmatrix} \frac{\gamma}{\Delta} C_{1a}^{s_1} & \frac{\gamma}{\Delta} C_{1b}^{s_1} \\ \frac{\delta}{\Delta} C_{1a}^{s_1} & \frac{\delta}{\Delta} C_{1b}^{s_1} \end{bmatrix}, \tag{57}$$

where

$$\frac{\gamma}{\Delta} = \frac{R_{s_1}^{J_2}(1 - R_{s_3}^{s_2} R_{s_2}^{s_3}) + R_{s_3}^{J_2} R_{s_1}^{s_3} + R_{s_3}^{J_2} R_{s_2}^{s_3} R_{s_1}^{s_2}}{1 - R_{s_2}^{s_1} R_{s_1}^{s_2} - R_{s_3}^{s_1} R_{s_1}^{s_3} - R_{s_3}^{s_2} R_{s_2}^{s_3} - R_{s_3}^{s_1} R_{s_2}^{s_3} R_{s_1}^{s_2} - R_{s_2}^{s_1} R_{s_3}^{s_2} R_{s_1}^{s_3}}, \tag{58}$$

$$\frac{\delta}{\Delta} = \frac{R_{s_1}^{s_2} + R_{s_3}^{s_2} R_{s_1}^{s_3}}{1 - R_{s_2}^{s_1} R_{s_1}^{s_2} - R_{s_3}^{s_1} R_{s_1}^{s_3} - R_{s_3}^{s_2} R_{s_2}^{s_3} - R_{s_3}^{s_1} R_{s_2}^{s_3} R_{s_1}^{s_2} - R_{s_2}^{s_1} R_{s_3}^{s_2} R_{s_1}^{s_3}}. \tag{59}$$

These intermodular response expressions can be physically interpreted in exactly the same way as those in the previous section. The response paths are diagrammatically depicted in Figs 10 and 11.

2.7. SPARSELY INTERACTING MODULES

The general solutions for the two-, three- and four-module systems become more practicable when they reduce to the solutions for more realistic systems with sparse connections (this is one of the reasons we give them in full). To illustrate this, we make the simplifying assumption [see Fig. 12(a)] that there is a strictly one-way connection between modules 2 and 3 in the three-module system in Fig. 9, i.e. that, say $\mathbf{M}_3^2 \neq \mathbf{0}$ while $\mathbf{M}_3^2 = \mathbf{0}$. Equation (53) now becomes

$$\mathbf{G}_1^1 = [\mathbf{I} - \mathbf{M}_3^1 \mathbf{M}_1^3 - \mathbf{M}_2^1 \mathbf{M}_1^2 + \mathbf{M}_3^1 \mathbf{M}_2^3 \mathbf{M}_1^2]^{-1} \mathbf{C}_1. \tag{60}$$

We can go further and assume, for instance, that there is only a one-way cyclical connection between the modules [Fig. 12(b); an example of a "democratic" hierarchy as given by Westerhoff *et al.* (1990)]. If the only non-zero matrices are $\mathbf{M}_3^1$, $\mathbf{M}_2^3$ and $\mathbf{M}_1^2$, then

$$\mathbf{G}_1^1 = [\mathbf{I} + \mathbf{M}_3^1 \mathbf{M}_2^3 \mathbf{M}_1^2]^{-1} \mathbf{C}_1. \tag{61}$$

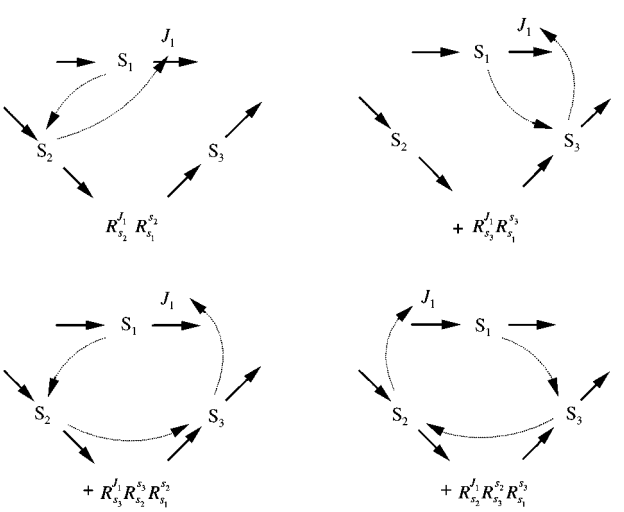

FIG. 10. The intermodular J_1-response patterns to a change in s_1 in the three-module system. Together, these responses form the numerator of eqn (55).

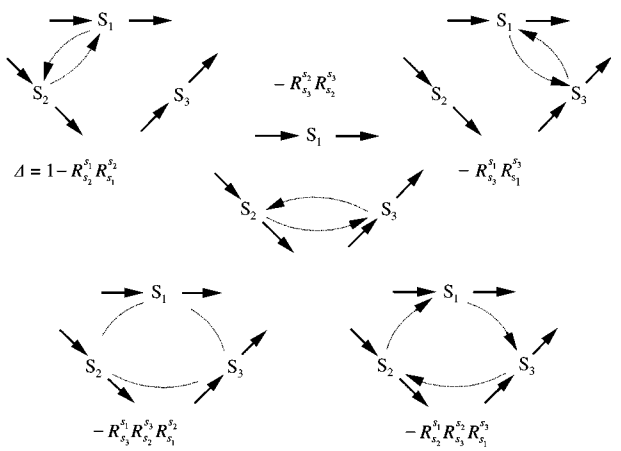

FIG. 11. The intermodular s_1-response patterns to a change in itself in the three-module system. Together, these responses form the denominator of eqn (55).

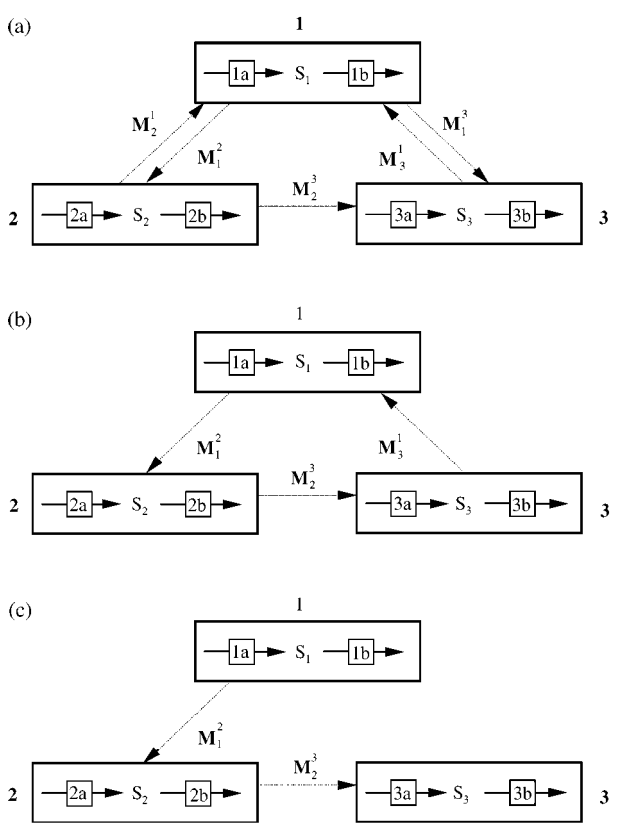

FIG. 12. Different forms of sparsely connected three-module systems.

This result can be generalized: if there is only one-directional communication between the n modules of a system so that a module can communicate cyclically with itself then the control of, say, module 1 on its own independent variables is given by

$$\mathbf{G}_1^1 = (\mathbf{I} - \mathbf{M}_2^1 \mathbf{M}_3^2 \cdots \mathbf{M}_n^{n-1} \mathbf{M}_1^n)^{-1} \mathbf{C}_1 . \quad (62)$$

If this feedback cycle is broken by, say, $\mathbf{M}_3^1$ being zero, then $\mathbf{G}_1^1 = \mathbf{C}_1$ (and by the same token $\mathbf{G}_2^2 = \mathbf{C}_2$ and $\mathbf{G}_3^3 = \mathbf{C}_3$); the integral control of a module on itself then becomes equal to the intramodular control. Of course, module 1 can still affect modules 2 and 3, while module 2 can still affect module 3. This system, shown in Fig. 12(c), corresponds to a "dictatorial" type of system (Westerhoff *et al.*, 1990). From eqn (51) we can deduce that for such a dictatorial system

$$\mathbf{G}_1^3 = \mathbf{M}_2^3 \mathbf{M}_1^2 \mathbf{C}_1 , \quad (63)$$

$$\mathbf{G}_1^2 = \mathbf{M}_1^2 \mathbf{C}_1 , \quad (64)$$

$$\mathbf{G}_2^3 = \mathbf{M}_2^3 \mathbf{C}_1 . \quad (65)$$

This is similar to the Kahn & Westerhoff (1991) "cascade control theorem". The extension of these results to systems with orders other than three is obvious.

3. Attenuation/Amplification of Control in Multi-level Systems

In Section 2.4, we derived the relationship between the integral control coefficients of a module on its own variables and the intramodular control coefficients of that module. We are now in a position to ask by which factor the intermodular interactions change the intramodular control coefficients of a module embedded in a multi-level system. This factor must be a ratio of integral and intramodular control coefficients, which we shall call an A-coefficient (the A can refer to either amplification or attenuation, depending on whether its value is greater or smaller than one). In general, an A-coefficient of a step i in any module will be the ratio of a integral control coefficient of i with respect to any steady-state variable y_j and a intramodular control coefficient of i with respect to any steady-state variable y_k belonging to the same module in

which step i occurs:

$$A_i^{y_k:y_k} = \frac{G_i^{y_j}}{C_i^{y_k}}. \tag{66}$$

We are particularly interested in A-coefficients of the type $A_i^{y_j:y_k}$, i.e. the ratio of a integral and intramodular control coefficient of a step with respect to the same variable, the step and the variable belonging to the same module. The reason is that this type of A-coefficient quantifies the degree to which intramodular control is amplified or attenuated when a module is embedded in a multi-level system.

In the previous sections we obtained expressions for integral control coefficients in terms of intramodular control coefficients and intermodular response coefficients. Simply dividing such expressions by the relevant intramodular control coefficient gives the required A-coefficient. Consider, for example, the result of dividing eqn (35) by $C_{1a}^{J_1}$:

$$\frac{G_{1a}^{J_1}}{C_{1a}^{J_1}} = 1 + \frac{R_{s_2}^{J_1} R_{s_1}^{s_2}}{1 - R_{s_2}^{s_1} R_{s_1}^{s_2}} \frac{C_{1a}^{J_1}}{C_{1a}^{s_1}}. \tag{67}$$

The ratio of integral to intramodular control coefficients on the left-hand side (l.h.s.) is per definition $A_{1a}^{J_1:J_1}$. The ratio of control coefficients on the right-hand side (r.h.s.) might seem similar to an A-coefficient, but differs in that it is a ratio of intramodular control coefficients; such ratios have been defined by Hofmeyr & Cornish-Bowden (1996) as *co-control coefficients*

$$O_i^{y_j:y_k} = \frac{C_i^{y_j}}{C_i^{y_k}}. \tag{68}$$

Using these definitions, eqn (67) can be written as

$$A_{1a}^{J_1:J_1} = 1 + \frac{R_{s_2}^{J_1} R_{s_1}^{s_2}}{1 - R_{s_2}^{s_1} R_{s_1}^{s_2}} O_{1a}^{s_1:J_1}. \tag{69}$$

The intermodular response term that occurs in this expression is unchanged and needs no further comment. Whether intramodular control of J_1 by step 1a is amplified ($A_{1a}^{J_1:J_1} > 1$) or attenuated ($A_{1a}^{J_1:J_1} < 1$) when module 1 is embedded in the larger system depends on whether the left-hand product of the intermodular response term and the co-control coefficient is positive or negative. Typically, $O_{1a}^{s_1:J_1} > 0$ (increasing the activity of 1a will increase both s_1 and J_1), so that it is the numerator $R_{s_2}^{J_1} R_{s_1}^{s_2}$ of the intermodular response term that would determine the direction of the effect under normal circumstances; the magnitude of the effect is determined by both factors. The effect is absent (i.e. $A_{1a}^{J_1:J_1} = 1$) whenever the steady state in module 1 is not sensitive to the metabolism in module 2 (i.e. $R_{s_2}^{J_1} = 0$ or $R_{s_2}^{s_1} = 0$), or whenever the concentration of S_1 changes much less than does J_1 on modulation of step 1a in module 1 in isolation (i.e. $O_{1a}^{s_1:J_1} \to 0$).

An expression for the coefficient $A_{1a}^{s_1:s_1}$ can be obtained by dividing eqn (36) by $C_{1a}^{s_1}$. This gives

$$A_{1a}^{s_1:s_1} = \frac{1}{1 - R_{s_2}^{s_1} R_{s_1}^{s_2}}. \tag{70}$$

Here the direction of the effect depends solely on the circular reverberation term. This must obviously be so: if s_1 has a positive intermodular effect on itself, then s_1-control by 1a is amplified when module 1 is embedded in the larger system; if the intermodular effect is negative, s_1-control is attenuated.

In this section, we derived expressions for A-coefficients from previously obtained expressions for integral control coefficients. In Appendix B, a general matrix formulation of A-coefficients in terms of co-control coefficients and intermodular response is derived.

The degree to which control of a system over itself is amplified or attenuated when it is embedded in a larger multi-level system is independent of the relative time-scales of the different modules, provided that control is defined in terms of ultimate rather than quasi-steady state. The relative relaxation times do depend on the relative time-scales. This is clearly demonstrated by the numerical simulation of the two-module scheme in Fig. 13, the results of which are given in Fig. 14. The simulation conditions are described in the legend to Fig. 13.

Figure 14 follows the time course of the transient concentrations s from an initial steady state following a modulation of the activity of step 2b. On the graph are shown the new steady-state

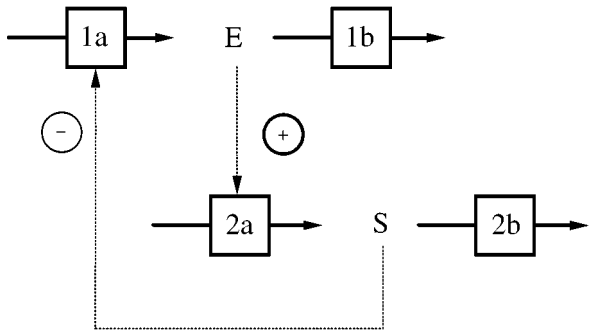

FIG. 13. A democratic two-module system where module 1 represents enzyme synthesis and degradation, and module 2 a metabolic system in which the enzyme synthesized in module 1 catalyses reaction 2a. The intermediate S in module 2 acts as a suppressor of the synthesis of enzyme 1a. This time-dependent behaviour of this system following a perturbation of the steady state was simulated using SCAMP (Sauro, 1993). The rate equations were $v_{1a} = \alpha/(2 + 100s)$, $v_{1b} = \alpha e/(1 + e)$, $v_{2a} = 200e/(11 + s)$, $v_{2b} = \beta s/(1 + s)$. With $\alpha = 1.77$ and $\beta = 1$ the steady state was calculated as $s = 0.5068$ and $e = 0.01935$. With this steady state as the initial condition, β was set to 0.99 (decreasing the activity of 2b by 1%) and the time evolution of the system followed. The simulation was repeated at various values of α to create different time scales between the two modules. The results are given in Fig. 14.

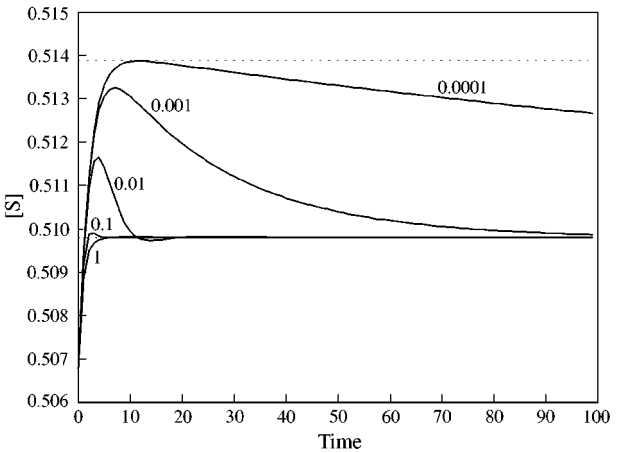

FIG. 14. Simulation of the time course for change in the concentration of intermediate S in Fig. 13 following a 1% decrease in the activity of step 2b. Each curve represents a different time scale between modules 1 and 2, the number next to each curve being the ratio J_1/J_2 of the steady-state fluxes through modules 1 and 2. The dotted line at 0.5097 is the steady state value of s predicted by $G^s_{2b} = -0.59$, while the dotted line at 0.5138 is the steady-state value of s predicted by $C^s_{2b} = -1.42$, i.e. the value s would have reached if module 2 were isolated. The attenuation coefficients $A^{s:s}_{2b} = 0.42$ is the ratio G^s_{2b}/C^s_{2b}. The original steady state value of s is 0.5068.

value as predicted by $C^{J_2}_{2b}$ (the higher dotted line) and by $G^{J_2}_{2b}$ (the lowest dotted line). The relative time-scales of the two modules, as measured by the ratio of steady-state fluxes J_1/J_2, clearly affects the time course: When the flux J_1 is 1000-fold lower than J_2 (which is probably quite realistic, if not an underestimation), s actually attains the value predicted by the intramodular coefficient, after which it slowly relaxes to the steady state predicted by the integral coefficient. The closer the time-scales of the two systems, the less the overshoot, until, at comparable time-scales, s moves directly to the steady state predicted by $G^{J_2}_{2b}$.

4. Discussion

We have developed an analysis of the control of intracellular reaction networks that consist of distinct levels between which there is no net transfer of chemicals. We have given a strict definition of such multi-level networks in terms of the organization of the flux-stoichiometry matrix **K**. Thanks to the sequencing of their genomes, living systems are becoming defined in terms of their total reaction content. Consequently, we know that even relatively simple organisms have conserved thousands of enzymes. In principle, we now have the experimental tools in hand to analyse the dynamic networks formed by these enzymes. However, we are faced with the complexity of thousands of enzymes that might interact with thousands of enzymes through intermediates affecting their rates. Luckily, these millions of possible interactions do not occur in reality; most enzymes interact only with a few other enzymes. This effective sparseness of interactions gives hope that we may ultimately understand living cells scientifically. Recognition of structure in this sparseness allows simplification.

One way to simplify is based on the recognition that parts of metabolism may only interact through one or a few common intermediates which are the products of one part and the substrates of another part. This type of modularity forms the basis for "top-down" or modular analysis by Westerhoff and co-workers (Westerhoff & van Dam, 1987; Schuster *et al.*, 1993) and Brand and co-workers (Brown *et al.*, 1990; Brand, 1996).

The modularity in multi-level networks as discussed here and in Kahn & Westerhoff (1991) and

Van der Gugten & Westerhoff (1997) is of a different type. It extends our understanding of the control of metabolic fluxes to include the levels of signal transduction and gene expression (Wijker *et al.*, 1995). This of course is essential for functional genome analysis (Teusink *et al.*, 1998).

An example of the experimental relevance of the multi-level modular approach resides in the analysis of signal amplification in signal transduction through multi-cyclic cascades (Chock & Stadtman, 1977; Goldbeter & Koshland, 1984; Ferrell, 1996; Ferrell & Machleder, 1998; Kholodenko *et al.*, 1997) [see, however, Brown *et al.* (1997) and Cárdenas (1997)].

The most important forerunner of this paper is that of Kahn & Westerhoff (1991), which had as aim the extension of metabolic control analysis to include modules that affect each other solely by regulatory interactions and not by mass-transfer. Of their theorems the one most pertinent to the present analysis is the "block composition theorem", which relates, in our terminology, blocks of the integral flux and concentration control matrices (their $\boldsymbol{\Phi}_i^j$ and $\boldsymbol{\Gamma}_i^j$), the intramodular control matrices (their $\boldsymbol{\Phi}_i$ and $\boldsymbol{\Gamma}_i$), and those blocks of the elasticity matrices that describe intermodular effects (their $\mathbf{D}_j^i$). The following is one of the relationships that comprise the theorem and expresses the flux-control of module i upon j

$$\boldsymbol{\Phi}_i^j = \boldsymbol{\Phi}_i\left(\mathbf{I} + \sum_{k \neq i} \mathbf{D}_k^i \boldsymbol{\Gamma}_j^k\right). \tag{71}$$

It shows that, because the r.h.s. contains integral coefficients $\boldsymbol{\Gamma}_j^k$, the block composition theorem in general does not manage to express integral control purely in terms of intramodular control and intermodular response, although it does achieve it explicitly for special cases such as one-way cyclical multi-level networks [e.g. Fig. 12(b)]. Also, recursive application of the two-module theorem would in principle solve the general case.

The analysis described in this paper solves this problem, and also provides an alternative way of arriving at many of the Kahn & Westerhoff (1991) conclusions. There are a number of other significant differences: Kahn & Westerhoff (1991) used Reder's (1988) structural equations as the basis for their analysis, whereas our analysis is based on the $\mathbf{CE} = \mathbf{I}$ square matrix formulated by the groups of Westerhoff (Westerhoff & Kell, 1987; Westerhoff *et al.*, 1994) and Cascante (Cascante *et al.*, 1989a, b), and generalized by Hofmeyr & Cornish-Bowden (1996) who merged it with Reder's (1988) method. A second difference is that whereas Kahn & Westerhoff (1991) used the block-diagonalizability of the stoichiometric matrix as a criterion for multi-level systems not connected by mass-transfer, we use the less limiting criterion of block-diagonalizability of the $\mathscr{K}$-matrix as described by Schuster & Schuster (1992) and Heinrich & Schuster (1996) (an example is given further on).

Another recent paper that uses the $\mathbf{CE} = \mathbf{I}$ formulation to study a multi-level system is that by Van der Gugten & Westerhoff (1997). These authors focused on the various ways the control of multi-level systems can be analysed, and formulated the unconnected multi-level system that would have control properties identical to those of the connected multi-level system. Equations analogous to our eqn (25) were central to this analysis. They also demonstrated that the systemic effect may be either incorporated in the control coefficients or in "global" elasticity coefficients, or in both, but that the various types of control and elasticity coefficients should not be confused.

An issue of general importance is of whether cellular processes truly form a multi-level network, and, therefore, whether the analysis developed in this paper is actually of any practical use. Our definition for multi-level modularity is based on the absence of mass-transfer between modules; superficially, this criterion seems unattainable in many cases. For example, the DNA–mRNA–enzyme–metabolism cascade is connected by mass transfer in that amino acids and nucleotides (products of metabolism), respectively, serve as substrates for enzymes and for DNA and RNA. The different hierarchical levels are also connected by coenzyme pairs that transfer groups from one level to the other. However, more careful analysis shows that, usually, metabolic systems can be regarded as effectively isolated from the modules which synthesize their enzymes and polynucleotides. Consider, for example, the pathway depicted in Fig. 15: the

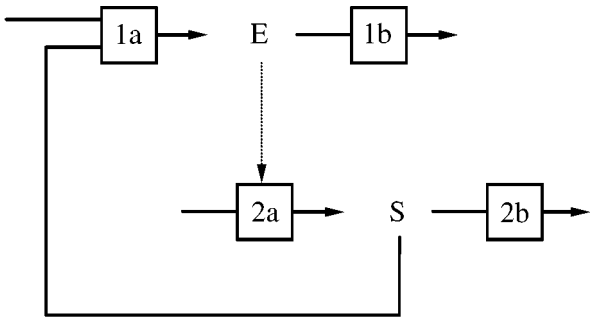

FIG. 15. A mass-action connected system that can become multi-level. Reactions 1a and 1b represent synthesis and degradation of enzyme E, and reactions 2a and 2b a metabolic system in which the enzyme E catalyses reaction 2a. The intermediate S is an amino acid that is used, amongst others, for the synthesis of enzyme E, which means that, in principle, the two subsystems are connected by mass action. However, S is also used for the synthesis of all other proteins and possibly also in other cellular processes (these reactions are collectively represented by step 2b). The text explains which conditions cause this system to be effectively multi-level, i.e. when modules 1 and 2 can for all practical purposes be considered to be unconnected by mass action.

metabolic system in question synthesizes amino acid S, which, in turn, is used as one of the substrates for the synthesis of enzyme 1a, which catalyses step 2a. The two systems are unquestionably connected by mass transfer. If S was used only for the synthesis of that specific enzyme E (i.e. if step 2b did not exist) then the system would not be multi-level. However, S is used for the synthesis of all other proteins and, possibly, also for other processes (collectively represented by step 2b), so that in practice the fraction of J_{2a} carried by J_1 is minute compared to the fraction carried by J_{2b}. That this effectively makes the system multi-level is clear from the following, which shows how the $\mathscr{K}$-matrix for the system in Fig. 15 becomes block-diagonalizable when $J_1 \ll J_{2a}$ and, therefore, $J_{2b} \approx J_{2a}$:

$$\begin{bmatrix} \frac{J_{2b}}{J_{2a}} & \frac{J_1}{J_{2a}} \\ 1 & 0 \\ 0 & 1 \\ 0 & 1 \end{bmatrix} \longrightarrow \begin{bmatrix} 1 & 0 \\ 1 & 0 \\ 0 & 1 \\ 0 & 1 \end{bmatrix}. \tag{72}$$

Another case where, seemingly, there could be mass transfer between levels is where the intermodular interaction is catalytic. Three such examples are shown in Fig. 16. When depicted as in schemes A, C and E there is no visible mass transfer between the modules and it seems obvious that they form true levels, but when written more realistically to make the interaction between enzyme and substrate explicit it is not immediately clear whether the systems are in fact multi-level because in all three cases the enzyme X_2 is involved as part of an intermediate in the other module. However, as is clear from their **E**-matrices, all three cases are in fact multi-level because their $\mathscr{K}$-matrices (columns 1 and 3 in the following representations) remain block-diagonalizable. Close inspection reveals that, although X_2 does partake in reaction 2, no mass transfer actually takes place because of the catalytic nature of the interaction.

The **E**-matrices for the system in Fig. 16(a) and (b) are

$$\begin{bmatrix} 1 & -\varepsilon_{x_2}^{v_{1a}} & 0 & 0 \\ 1 & -\varepsilon_{x_2}^{v_{1b}} & 0 & 0 \\ 0 & -\varepsilon_{x_2}^{v_{2a}} & 1 & -\varepsilon_{y_2}^{v_{2a}} \\ 0 & 0 & 1 & -\varepsilon_{y_2}^{v_{2b}} \end{bmatrix}$$

$$\rightarrow \begin{bmatrix} 1 & -\varepsilon_{x_2}^{v_{1a}} & 0 & 0 & 0 \\ 1 & -\varepsilon_{x_2}^{v_{1b}} & 0 & 0 & 0 \\ 0 & -\varepsilon_{x_2}^{v_{2a}} & 1 & -\varepsilon_{[y_1x_2]}^{v_{2a}} & 0 \\ 0 & -\varepsilon_{x_2}^{v_{2b}} & 1 & -\varepsilon_{[y_1x_2]}^{v_{2b}} & -\varepsilon_{y_2}^{v_{2b}} \\ 0 & 0 & 1 & 0 & -\varepsilon_{y_2}^{v_{2c}} \end{bmatrix}. \tag{73}$$

Going from the simpler to the more explicit representation does not change the overall picture. The system clearly remains "dictatorial" in that in both matrices $\mathbf{E}_1^2$ is non-zero while $\mathbf{E}_2^1$ is zero; there is one-way interaction between levels only. However, if the protease that catalyses step 1b could also degrade complex Y_1X_2, so that Y_1X_2 and X_2 compete for the same active site, then an elasticity $\varepsilon_{[y_1x_2]}^{v_{1b}}$ would appear in $\mathbf{E}_2^1$, making two-way interaction between the levels possible.

In both the other systems, i.e. that in Fig. 16(c) and (d) with **E**-matrices

$$\begin{bmatrix} \begin{matrix} 1 & -\left(\varepsilon_{x_2}^{v_{1a}} - \varepsilon_{x_1}^{v_{1a}}\dfrac{x_2}{x_1}\right) \\ 1 & -\left(\varepsilon_{x_2}^{v_{1b}} - \varepsilon_{x_1}^{v_{1b}}\dfrac{x_2}{x_1}\right) \end{matrix} & \begin{matrix} 0 & 0 \\ 0 & 0 \end{matrix} \\ \begin{matrix} 0 & -\varepsilon_{x_2}^{v_{2a}} \\ 0 & 0 \end{matrix} & \begin{matrix} 1 & -\varepsilon_{y_2}^{v_{2a}} \\ 1 & -\varepsilon_{y_2}^{v_{2b}} \end{matrix} \end{bmatrix} \rightarrow \begin{bmatrix} \begin{matrix} 1 & -\left(\varepsilon_{x_2}^{v_{1a}} - \varepsilon_{x_1}^{v_{1a}}\dfrac{x_2}{x_1}\right) \\ 1 & -\left(\varepsilon_{x_2}^{v_{1b}} - \varepsilon_{x_1}^{v_{1b}}\dfrac{x_2}{x_1}\right) \end{matrix} & \begin{matrix} 0 & 0 & \varepsilon_{x_1}^{v_{1a}}\dfrac{[y_1x_2]}{x_1} \\ 0 & 0 & \varepsilon_{x_1}^{v_{1b}}\dfrac{[y_1x_2]}{x_1} \end{matrix} \\ \begin{matrix} 0 & -\varepsilon_{x_2}^{v_{2a}} \\ 0 & -\varepsilon_{x_2}^{v_{2b}} \\ 0 & 0 \end{matrix} & \begin{matrix} 1 & -\varepsilon_{[y_1x_2]}^{v_{2a}} & 0 \\ 1 & -\varepsilon_{[y_1x_2]}^{v_{2b}} & -\varepsilon_{y_2}^{v_{2b}} \\ 1 & 0 & -\varepsilon_{y_2}^{v_{2c}} \end{matrix} \end{bmatrix} \tag{74}$$

and that in Fig. 16(e) and (f) with **E**-matrices

$$\begin{bmatrix} \begin{matrix} 1 & -\left(\varepsilon_{x_2}^{v_{1a}} - \varepsilon_{x_1}^{v_{1a}}\dfrac{x_2}{x_1}\right) \\ 1 & -\left(\varepsilon_{x_2}^{v_{1b}} - \varepsilon_{x_1}^{v_{1b}}\dfrac{x_2}{x_1}\right) \end{matrix} & \begin{matrix} 0 & 0 \\ 0 & 0 \end{matrix} \\ \begin{matrix} 0 & -\varepsilon_{x_2}^{v_{2a}} \\ 0 & 0 \end{matrix} & \begin{matrix} 1 & -\left(\varepsilon_{y_2}^{v_{2a}} - \varepsilon_{y_1}^{v_{2a}}\dfrac{y_2}{y_1}\right) \\ 1 & -\left(\varepsilon_{y_2}^{v_{2c}} - \varepsilon_{y_1}^{v_{2c}}\dfrac{y_2}{y_1}\right) \end{matrix} \end{bmatrix}$$

$$\rightarrow \begin{bmatrix} \begin{matrix} 1 & -\left(\varepsilon_{x_2}^{v_{1a}} - \varepsilon_{x_1}^{v_{1a}}\dfrac{x_2}{x_1}\right) \\ 1 & -\left(\varepsilon_{x_2}^{v_{1b}} - \varepsilon_{x_1}^{v_{1b}}\dfrac{x_2}{x_1}\right) \end{matrix} & \begin{matrix} 0 & 0 & \varepsilon_{x_1}^{v_{1a}}\dfrac{[y_1x_2]}{x_1} \\ 0 & 0 & \varepsilon_{x_1}^{v_{1b}}\dfrac{[y_1x_2]}{x_1} \end{matrix} \\ \begin{matrix} 0 & -\varepsilon_{x_2}^{v_{2a}} \\ 0 & -\varepsilon_{x_2}^{v_{2b}} \\ 0 & 0 \end{matrix} & \begin{matrix} 1 & -\varepsilon_{y_1}^{v_{2a}}\dfrac{y_2}{y_1} & -\left(\varepsilon_{[y_1x_2]}^{v_{2a}} - \varepsilon_{y_1}^{v_{2a}}\dfrac{[y_1x_2]}{y_1}\right) \\ 1 & -\varepsilon_{y_2}^{v_{2b}} & -\varepsilon_{[y_1x_2]}^{v_{2b}} \\ 1 & -\left(\varepsilon_{y_2}^{v_{2c}} - \varepsilon_{y_1}^{v_{2c}}\dfrac{y_2}{y_1}\right) & -\varepsilon_{y_1}^{v_{2c}}\dfrac{[y_1x_2)}{y_1} \end{matrix} \end{bmatrix} \tag{75}$$

the simpler representation on the left is dictatorial, but the explicit representation on the right is democratic because $\mathbf{E}_2^1$ now also contains non-zero elements, which means two-way interaction. Note that usually one would expect $\mathbf{E}_2^1$ to contain, if anything, elasticities of reactions in module 1 with respect to intermediates in module 2, which in these two cases do not exist, because there is no direct interaction between Y_2 and module 1 reactions. However, both the above $\mathbf{E}_2^1$ blocks contain elasticities with respect to x_1, an intermediate in module 1, but, and this is important, scaled with a concentration ratio that contains $[y_1x_2]$, the concentration of the complex Y_1X_2, which forms part of module 2. It is because module 1 in systems C, D, and E, F is moiety-conserving that there can be "back-pressure" from module 2 to module 1.

It is quite simple to understand this in physical terms. A perturbation of any parameter in module 2 changes the steady-state concentration to

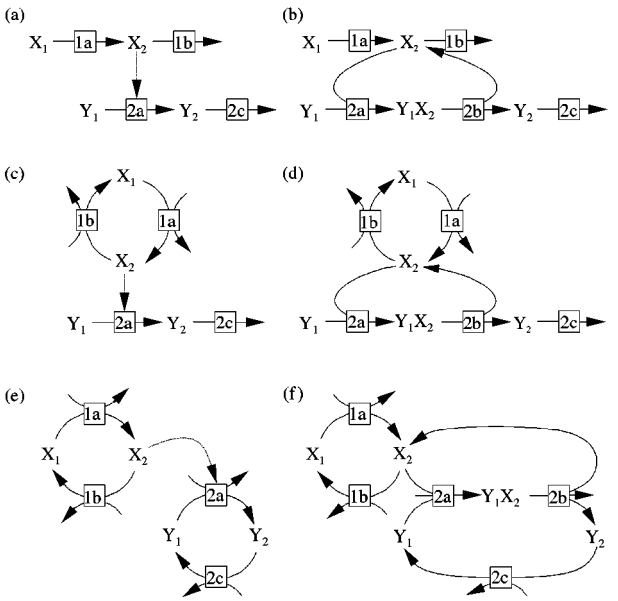

FIG. 16. Examples of simple multi-level systems with catalytic interaction between modules. System (a) consists of two linear modules in one of which the enzyme X_2 that catalyses the first reaction in the other module is synthesized and degraded; system (c) is similar to (a) but the enzyme exists in two interconvertible forms, one of which, X_2, is active; system (e) is a two-tier cascade of interconvertible enzyme forms where the active enzyme X_2 in the first cycle catalyses conversion 2a in the second. In the corresponding systems (b), (d), and (f) the catalytic mechanisms are explicitly taken into account. In the text it is shown that, while this does not affect the multi-levelness of these systems, it does show surprising features of their behaviour. It is shown that, while all three systems seem to be "dictatorial" [according to (a), (c), and (e)], the analysis of their more realistic forms show that the systems containing moiety-conserving cycles are actually "democratic".

some degree. Because the sum $x_1 + x_2 + [y_1 x_2]$ is constant this means that x_1 and x_2 must also change, which in turn will affect the reaction rates in module 1. Indeed, $\mathbf{E}_2^1$ becomes zero when $[y_1 x_2]$ is negligible compared to x_1 (this has also been shown by Fell & Sauro, 1990). The fact that elasticity coefficients with respect to x_1 rather than x_2 occur in $\mathbf{E}_2^1$ is a trivial consequence of the choice of independent intermediates in constructing the $\mathscr{L}$-matrix; it can just as readily contain elasticities with respect to x_2.

We have assumed that, of the two enzyme forms, only X_2 is catalytically active. In reality, both forms are often active, differing in degree of activity. However, although taking this into account complicates the analysis, it does not affect the conclusions.

These examples also demonstrate that block-diagonalizability of the stoichiometric matrix (Kahn & Westerhoff, 1991) is too stringent a condition for the absence of mass transfer between modules. Consider the stoichiometric matrices for the system in Fig. 16(a) and (b):

$$\begin{bmatrix} 1 & -1 & 0 & 0 \\ 0 & 0 & 1 & -1 \end{bmatrix}$$

$$\rightarrow \begin{bmatrix} 1 & -1 & -1 & 1 & 0 \\ 0 & 0 & 1 & -1 & 0 \\ 0 & 0 & 0 & 1 & -1 \end{bmatrix}. \qquad (76)$$

The right-hand stoichiometric matrix is clearly not block-diagonalizable, whereas we have already shown that the $\mathscr{K}$-matrix is.

We wish to thank Brett Olivier, Johann Rohwer, Jacky Snoep and Ton van der Gugten for discussions of this work and constructive criticism of the manuscript. JHSH was funded by the Foundation for Research Development. We also thank BioCentrum Amsterdam and IMBS for support.

REFERENCES

BRAND, M. D. (1996). Top down metabolic control analysis. *J. theor. Biol.* **182,** 351–360.

BROWN, G. C., HAFNER, R. P. &. BRAND, M. D. (1990). A 'top-down' approach to the determination of control coefficients in metabolic control theory. *Eur. J. Biochem.* **188,** 321–325.

BROWN, G. C., HOEK, J. B. & KHOLODENKO, B. N. (1997). Why do protein kinase cascades have more than one level? *Trends Biochem. Sci.* **22,** 288.

CÁRDENAS, M. L. (1997). Integrated and sensitive response to signals. In: *New Beer in an Old Bottle: Eduard Buchner and the Growth of Biochemical Knowledge* (Cornish-Bowden, A., ed.), pp. 159–172, Col.lecció Oberta, Universitat de València, Valencia.

CASCANTE, M., FRANCO, R. & CANELA, E. I. (1989a). Use of implicit methods from general sensitivity theory to develop a systematic approach to metabolic control. I. unbranched pathways. *Math. Biosci.* **94,** 271–288.

CASCANTE, M., FRANCO, R. & CANELA, E. I. (1989b). Use of implicit methods from general sensitivity theory to develop a systematic approach to metabolic theory to develop a systematic approach to metabolic control. II. complex systems. *Math. Biosci.* **94,** 289–309.

CHOCK, P. B. & STADTMAN, E. R. (1977). Superiority of interconvertible enzyme cascades in metabolic regulation: analysis of multicyclic systems. *Proc. Natl Acad. Sci. U.S.A.* **74,** 2766–2770.

CORNISH-BOWDEN, A. & HOFMEYR, J.-H. S. (1994). Determination of control coefficients in intact metabolic systems. *Biochem. J.* **298,** 367–375.

FELL, D. A. & SAURO, H. M. (1990). Metabolic control analysis—the effects of high enzyme concentrations. *Eur. J. Biochem.* **192,** 183–187.

FERRELL JR, J. E. (1996). Tripping the switch fantastic: how a protein kinase cascade can convert graded inputs into switch-like outputs. *TIBS* **21,** 460–466.

FERRELL JR, J. E. & MACHLEDER, E. M. (1998). The biochemical basis of an all-or-none cell fate switch in *Xenopus* oocytes. *Science* **280,** 895–898.

GANTMACHER, F. R. (1960). *The Theory of Matrices.* New York: Chelsea Publishing Company.

GOLDBETER, A. & KOSHLAND, D. E. J. (1984). Ultrasensitivity in biochemical systems controlled by covalent modification. *J. Biol. Chem.* **259,** 14 441–14 447.

HEINRICH, R. & RAPOPORT, T. A. (1974). A linear steady-state treatment of enzymatic chains: general properties, control and effector strength. *Eur. J. Biochem.* **42,** 89–95.

HEINRICH, R. & SCHUSTER, S. (1996). *The Regulation of Cellular Systems.* New York: Chapman & Hall.

HOFMEYR, J.-H. S. & CORNISH-BOWDEN, A. (1996). Co-response analysis: a new strategy for experimental metabolic control analysis. *J. theor. Biol.* **182,** 371–380.

HOFMEYR, J.-H. S., CORNISH-BOWDEN, A. & ROHWER, J. M. (1993). Taking enzyme kinetics out of control; putting control into regulation. *Eur. J. Biochem.* **212,** 833–837.

KACSER, H., BURNS, J. A. & FELL, D. A. (1995). The control of flux: 21 years on. *Biochem. Soc. Trans.* **23,** 341–366.

KAHN, D. & WESTERHOFF, H. V. (1991). Control theory of regulatory cascades. *J. theor. Biol.* **153,** 255–285.

KHOLODENKO, B. N. (1988). How do external parameters control fluxes and concentrations of metabolites? An additional relationship in the theory of metabolic control. *FEBS Lett.* **232,** 383–386.

KHOLODENKO, B. N., HOEK, J. B., WESTERHOFF, H. V. & BROWN, G. C. (1997). Quantification of information transfer via cellular signal transduction pathways [published erratum appears in *FEBS Lett.* (1997). **419,** 150]. *FEBS Lett.* **414,** 430–434.

REDER, C. (1988). Metabolic control theory: a structural approach. *J. theor. Biol.* **135,** 175–201.

ROHWER, J. M., SCHUSTER, S. & WESTERHOFF, H. V. (1996). How to recognise monofunctional units in a metabolic system. *J. theor. Biol.* **179,** 213–228.

SAURO, H. M. (1993). SCAMP: a general-purpose simulator and metabolic control analysis program. *Comput. Appl. Biosci.* **9,** 441–450.

SCHUSTER, S., KAHN, D. & WESTERHOFF, H. V. (1993). Modular analysis of the control of complex metabolic pathways. *Biophys. Chem.* **48,** 1–17.

SCHUSTER, S. & SCHUSTER, R. (1992). Decomposition of biochemical reaction systems according to flux control insusceptibility. *J. Chim. Phys.* **89,** 1887–1910.

TEUSINK, B., BAGANZ, F., WESTERHOFF, H. V. & OLIVER, S. G. (1998). Metabolic control analysis as a tool in the elucidation of the function of novel genes. In: *Methods in Microbiology* (Tuite, M. F. & Brown, A. J. P., eds), pp. 297–336. London: Academic Press.

VAN DER GUGTEN, A. A. & WESTERHOFF, H. V. (1997). Internal regulation of a modular system: the different faces of internal control. *BioSystems* **44,** 79–106.

WESTERHOFF, H. V. & KAHN, D. (1993). Control involving metabolism and gene expression. *Acta Biotheor.* **41,** 75–83.

WESTERHOFF, H. V. & KELL, D. B. (1987). Matrix method for determining steps most rate-limiting to metabolic fluxes in biotechnological processes. *Biotechnol. Bioeng.* **30,** 101–107.

WESTERHOFF, H. V. & VAN DAM, K. (1987). *Thermodynamics and Control of Free-energy Transduction.* Amsterdam: Elsevier.

WESTERHOFF, H. V., KOSTER, J. G., VAN WORKUM, M. & RUDD, K. E. (1990). On the control of gene expression. In: *Control of Metabolic Processes* (Cornish-Bowden, A. & Cárdenas, M. L., eds), pp. 399–412. New York: Plenum Press.

WESTERHOFF, H. V., HOFMEYR, J.-H. S. & KHOLODENKO, B. N. (1994). Getting to the inside of cells using metabolic control analysis. *Biophys. Chem.* **50,** 273–283.

WIJKER, J. E., JENSEN, P. R., SNOEP, J. L., GOMES, A. V., GUIRAL, M. & JONGSMA, A. P. M. (1995). Energy, control and DNA-structure in the living cell. *Biophys. Chem.* **55,** 153–165.

Appendix A

An Algorithm for Generating Intermodular Response Expressions

In the main text, we derived the general eqn (22) for the integral control coefficients of a single module (a block in $\mathbf{G}$):

$$\mathbf{G}_i^j = (\mathbf{M}^{-1})_{ji}\mathbf{C}_i.$$

When $i \neq j$ this equation describes the control of the steps in module i on the steady-state variables in module j; when $i = j$ it describes the control of module i on its own steady-state variables.

For a system with n fully interacting modules, the following algorithm generates the expression for either $\mathbf{G}_n^n$ or $\mathbf{G}_n^{n-1}$ (note that any two modules can be renumbered as n and $n-1$). In the first phase (steps 1–4) the matrix element $(\mathbf{M}^{-1})_{n,n}$ (which corresponds to the intermodular response term in the expression for $\mathbf{G}_n^n$) is generated; in the second phase (step 5), the matrix element $(\mathbf{M}^{-1})_{n-1,n}$ (which corresponds to the intermodular response term in the expression for $\mathbf{G}_n^{n-1}$) is generated. The algorithm was constructed by induction from the explicit solutions of the inverse $\mathbf{M}$-matrices of $n = 2, 3, 4$ fully connected systems.

Step 1. To obtain the intermodular response term in the expression for $\mathbf{G}_n^n$ write the symbol ${}^n\mathbf{M}_n^n$. The pre-superscript will act as a counter.

Step 2. Expand ${}^n\mathbf{M}_n^n$ as follows:

$${}^{n-1}\mathbf{M}_n^n - {}^{n-1}\mathbf{M}_{n-1}^n({}^{n-1}\mathbf{M}_{n-1}^{n-1})^{-1}\,{}^{n-1}\mathbf{M}_n^{n-1}.$$

Step 3. Repeat step 2 for each **M** term, decrementing the counter until it equals 1.

Step 4. In the final equation, replace each ${}^1\mathbf{M}_i^i$ with an identity matrix **I** and remove the counter from all **M**-terms.

Step 5. To obtain the intermodular response term in the expression for $\mathbf{G}_n^{n-1}$ pre-multiply the intermodular response term obtained above with the expression for ${}^{n-1}\mathbf{M}_n^{n-1}$ and do step 4.

We demonstrate the algorithm for the four-module system.

(*Steps* 1–3)

$$
\begin{aligned}
{}^4\mathbf{M}_4^4 &= {}^3\mathbf{M}_4^4 - {}^3\mathbf{M}_3^4({}^3\mathbf{M}_3^3)^{-1}\,{}^3\mathbf{M}_4^3 \\
&= ({}^2\mathbf{M}_4^4 - {}^2\mathbf{M}_2^4({}^2\mathbf{M}_2^2)^{-1}\,{}^2\mathbf{M}_4^2) \\
&\quad -({}^2\mathbf{M}_3^4 - {}^2\mathbf{M}_2^4({}^2\mathbf{M}_2^2)^{-1}\,{}^2\mathbf{M}_3^2) \\
&\quad \times({}^2\mathbf{M}_3^3 - {}^2\mathbf{M}_2^3({}^2\mathbf{M}_2^2)^{-1}\,{}^2\mathbf{M}_3^2)^{-1} \\
&\quad \times({}^2\mathbf{M}_4^3 - {}^2\mathbf{M}_2^3({}^2\mathbf{M}_2^2)^{-1}\,{}^2\mathbf{M}_4^2) \\
&= ({}^1\mathbf{M}_4^4 - {}^1\mathbf{M}_1^4({}^1\mathbf{M}_1^1)^{-1}\,{}^1\mathbf{M}_4^1) \\
&\quad - ({}^1\mathbf{M}_2^4 - {}^1\mathbf{M}_1^4({}^1\mathbf{M}_1^1)^{-1}\,{}^1\mathbf{M}_2^1) \\
&\quad \times({}^1\mathbf{M}_2^2 - {}^1\mathbf{M}_1^2({}^1\mathbf{M}_1^1)^{-1}\,{}^1\mathbf{M}_2^1)^{-1} \\
&\quad \times({}^1\mathbf{M}_4^2 - {}^1\mathbf{M}_1^2({}^1\mathbf{M}_1^1)^{-1}\,{}^1\mathbf{M}_4^1) \\
&\quad - [({}^1\mathbf{M}_3^4 - {}^1\mathbf{M}_1^4({}^1\mathbf{M}_1^1)^{-1}\,{}^1\mathbf{M}_3^1) \\
&\quad - ({}^1\mathbf{M}_2^4 - {}^1\mathbf{M}_1^4({}^1\mathbf{M}_1^1)^{-1}\,{}^1\mathbf{M}_2^1) \\
&\quad \times({}^1\mathbf{M}_2^2 - {}^1\mathbf{M}_1^2({}^1\mathbf{M}_1^1)^{-1}\,{}^1\mathbf{M}_2^1)^{-1} \\
&\quad \times({}^1\mathbf{M}_3^2 - {}^1\mathbf{M}_1^2({}^1\mathbf{M}_1^1)^{-1}\,{}^1\mathbf{M}_3^1)]. \\
&\quad \times[({}^1\mathbf{M}_3^3 - {}^1\mathbf{M}_1^3({}^1\mathbf{M}_1^1)^{-1}\,{}^1\mathbf{M}_3^1) \\
&\quad - ({}^1\mathbf{M}_2^3 - {}^1\mathbf{M}_1^3({}^1\mathbf{M}_1^1)^{-1}\,{}^1\mathbf{M}_2^1) \\
&\quad \times({}^1\mathbf{M}_2^2 - {}^1\mathbf{M}_1^2({}^1\mathbf{M}_1^1)^{-1}\,{}^1\mathbf{M}_2^1)^{-1} \\
&\quad \times({}^1\mathbf{M}_3^2 - {}^1\mathbf{M}_1^2({}^1\mathbf{M}_1^1)^{-1}\,{}^1\mathbf{M}_3^1)]. \\
&\quad \times[({}^1\mathbf{M}_4^3 - {}^1\mathbf{M}_1^3({}^1\mathbf{M}_1^1)^{-1}\,{}^1\mathbf{M}_4^1) \\
&\quad - ({}^1\mathbf{M}_2^3 - {}^1\mathbf{M}_1^3({}^1\mathbf{M}_1^1)^{-1}\,{}^1\mathbf{M}_2^1) \\
&\quad \times({}^1\mathbf{M}_2^2 - {}^1\mathbf{M}_1^2({}^1\mathbf{M}_1^1)^{-1}\,{}^1\mathbf{M}_2^1)^{-1} \\
&\quad \times({}^1\mathbf{M}_4^2 - {}^1\mathbf{M}_1^2({}^1\mathbf{M}_1^1)^{-1}\,{}^1\mathbf{M}_4^1)].
\end{aligned}
$$

(*Step* 4) The intermodular response term $(\mathbf{M}^{-1})_{44}$ in the expression $\mathbf{G}_4^4 = (\mathbf{M}^{-1})_{44}\mathbf{C}_4$ is

$$
\begin{aligned}
(\mathbf{M}^{-1})_{44} &= (\mathbf{I} - \mathbf{M}_1^4\mathbf{M}_4^1) - (\mathbf{M}_2^4 - \mathbf{M}_1^4\mathbf{M}_2^1) \\
&\quad \times(\mathbf{I} - \mathbf{M}_1^2\mathbf{M}_2^1)^{-1}(\mathbf{M}_4^2 - \mathbf{M}_1^2\mathbf{M}_4^1) \\
&\quad - [(\mathbf{M}_3^4 - \mathbf{M}_1^4\mathbf{M}_3^1) - (\mathbf{M}_2^4 - \mathbf{M}_1^4\mathbf{M}_2^1) \\
&\quad \times(\mathbf{I} - \mathbf{M}_1^2\mathbf{M}_2^1)^{-1}(\mathbf{M}_3^2 - \mathbf{M}_1^2\mathbf{M}_3^1)]. \\
&\quad \times[(\mathbf{I} - \mathbf{M}_1^3\mathbf{M}_3^1) - (\mathbf{M}_2^3 - \mathbf{M}_1^3\mathbf{M}_2^1) \\
&\quad \times(\mathbf{I} - \mathbf{M}_1^2\mathbf{M}_2^1)^{-1}(\mathbf{M}_3^2 - \mathbf{M}_1^2\mathbf{M}_3^1)]. \\
&\quad \times[(\mathbf{M}_4^3 - \mathbf{M}_1^3\mathbf{M}_4^1) - (\mathbf{M}_2^3 - \mathbf{M}_1^3\mathbf{M}_2^1) \\
&\quad \times(\mathbf{I} - \mathbf{M}_1^2\mathbf{M}_2^1)^{-1}(\mathbf{M}_4^2 - \mathbf{M}_1^2\mathbf{M}_4^1)].
\end{aligned}
$$

(*Step* 5) The intermodular response term $(\mathbf{M}^{-1})_{34}$ in the expression $\mathbf{G}_4^3 = (\mathbf{M}^{-1})_{34}\mathbf{C}_4$ is obtained as ${}^3\mathbf{M}_4^3(\mathbf{M}^{-1})_{44}$, which can be written in the expanded form

$$
\begin{aligned}
&[(\mathbf{M}_4^3 - \mathbf{M}_1^3\mathbf{M}_4^1) - (\mathbf{M}_2^3 - \mathbf{M}_1^3\mathbf{M}_2^1) \\
&\quad \times(\mathbf{I} - \mathbf{M}_1^2\mathbf{M}_2^1)^{-1}(\mathbf{M}_4^2 - \mathbf{M}_1^2\mathbf{M}_4^1)](\mathbf{M}^{-1})_{44}.
\end{aligned}
$$

Appendix B

A Matrix Formulation that Relates *A*-coefficients to Co-control Coefficients and Intermodular Response

A-coefficients are introduced into the integral control-matrix eqn (5) in exactly the same way as co-control coefficients were introduced (Hofmeyr *et al.*, 1993; Hofmeyr & Cornish-Bowden, 1996), i.e. by inserting the diagonal matrix product $\mathbf{D}(C)^{-1}\cdot\mathbf{D}(C) = \mathbf{I}$ between **G** and **E** to give

$$\mathbf{G}\cdot\mathbf{D}(C)^{-1}\cdot\mathbf{D}(C)\cdot\mathbf{E} = \mathbf{I}. \qquad \text{(B.1)}$$

$\mathbf{D}(C)$ is a square matrix that contains intramodular control coefficients on its diagonal.

In order to distinguish internal response from intermodular response, we again insert the block-diagonal matrix product $\mathbf{D}(\mathbf{E})\cdot\mathbf{D}(\mathbf{C}) = \mathbf{I}$ between $\mathbf{D}(C)$ and $\mathbf{E}$ to obtain:

$$\mathbf{G}\cdot\mathbf{D}(C)^{-1}\cdot\mathbf{D}(C)\cdot\mathbf{D}(\mathbf{E})\cdot\mathbf{D}(\mathbf{C})\cdot\mathbf{E} = \mathbf{I}. \quad \text{(B.2)}$$

For the two-module system in Fig. 1(a) with the intramodular control coefficients in $\mathbf{D}(C)$ referring to the fluxes this equation would be

$$\begin{bmatrix} G_{1a}^{J_1} & G_{1b}^{J_1} & G_{2a}^{J_1} & G_{2b}^{J_1} \\ G_{1a}^{s_1} & G_{1b}^{s_1} & G_{2a}^{s_1} & G_{2b}^{s_1} \\ G_{1a}^{J_2} & G_{1b}^{J_2} & G_{2a}^{J_2} & G_{2b}^{J_2} \\ G_{1a}^{s_2} & G_{1b}^{s_2} & G_{2a}^{s_2} & G_{2b}^{s_2} \end{bmatrix} \begin{bmatrix} \frac{1}{C_{1a}^{J_1}} & 0 & 0 & 0 \\ 0 & \frac{1}{C_{1b}^{J_1}} & 0 & 0 \\ 0 & 0 & \frac{1}{C_{2a}^{J_2}} & 0 \\ 0 & 0 & 0 & \frac{1}{C_{2b}^{J_2}} \end{bmatrix}$$

$$\times \begin{bmatrix} C_{1a}^{J_1} & 0 & 0 & 0 \\ 0 & C_{1b}^{J_1} & 0 & 0 \\ 0 & 0 & C_{2a}^{J_2} & 0 \\ 0 & 0 & 0 & C_{2b}^{J_2} \end{bmatrix} \begin{bmatrix} 1 & -\varepsilon_{s_1}^{v_{1a}} & 0 & 0 \\ 1 & -\varepsilon_{s_1}^{v_{1b}} & 0 & 0 \\ 0 & 0 & 1 & -\varepsilon_{s_2}^{v_{2a}} \\ 0 & 0 & 1 & -\varepsilon_{s_2}^{v_{2b}} \end{bmatrix}$$

$$\times \begin{bmatrix} C_{1a}^{J_1} & C_{1b}^{J_1} & 0 & 0 \\ C_{1a}^{s_1} & C_{1b}^{s_1} & 0 & 0 \\ 0 & 0 & C_{2a}^{J_2} & C_{2b}^{J_2} \\ 0 & 0 & C_{2a}^{s_2} & C_{2b}^{s_2} \end{bmatrix}$$

$$\times \begin{bmatrix} 1 & -\varepsilon_{s_1}^{v_{1a}} & 0 & -\varepsilon_{s_2}^{v_{1a}} \\ 1 & -\varepsilon_{s_1}^{v_{1b}} & 0 & -\varepsilon_{s_2}^{v_{1b}} \\ 0 & -\varepsilon_{s_1}^{v_{2a}} & 1 & -\varepsilon_{s_2}^{v_{2a}} \\ 0 & -\varepsilon_{s_1}^{v_{2b}} & 1 & -\varepsilon_{s_2}^{v_{2b}} \end{bmatrix} = \begin{bmatrix} 1 & 0 & 0 & 0 \\ 0 & 1 & 0 & 0 \\ 0 & 0 & 1 & 0 \\ 0 & 0 & 0 & 1 \end{bmatrix}. \quad \text{(B.3)}$$

The first product pair, i.e. $\mathbf{G}\cdot\mathbf{D}(C)^{-1}$, gives $\mathbf{A}$, a partitioned matrix of A-coefficients. The second product pair, i.e. $\mathbf{D}(C)\cdot\mathbf{D}(\mathbf{E})$, gives a block-diagonal matrix $\mathbf{D}(\mathbf{R})$ of *intramodular* internal response coefficients (Hofmeyr *et al.*, 1993; Hofmeyr & Cornish-Bowden, 1996). The last product pair, i.e. $\mathbf{D}(\mathbf{C})\cdot\mathbf{E}$, is, as before, the intermodular response matrix $\mathbf{M}$. An intramodular internal response coefficient of steady-state variable y with respect to s_j via step i is defined as (Kahn & Westerhoff, 1991; Hofmeyr *et al.*,. 1993)

$${}^{i}R_{s_j}^{y} = C_i^y \varepsilon_{s_j}^{v_i}, \quad \text{(B.4)}$$

where C_i^y is a y-control coefficient of step i, and $\varepsilon_{s_j}^{v_i}$ is the elasticity coefficient of step i towards intermediate concentration s_j.

Therefore,

$$\mathbf{A}\cdot\mathbf{D}(\mathbf{R})\cdot\mathbf{M} = \mathbf{I}, \quad \text{(B.5)}$$

which, for the two-module system is

$$\begin{bmatrix} A_{1a}^{J_1:J_1} & A_{1b}^{J_1:J_1} & A_{2a}^{J_1:J_2} & A_{2b}^{J_1:J_2} \\ A_{1a}^{s_1:J_1} & A_{1b}^{s_1:J_1} & A_{2a}^{s_1:J_2} & A_{2b}^{s_1:J_2} \\ A_{1a}^{J_2:J_1} & A_{1b}^{J_2:J_1} & A_{2a}^{J_2:J_2} & A_{2b}^{J_2:J_2} \\ A_{1a}^{s_2:J_1} & A_{1b}^{s_2:J_1} & A_{2a}^{s_2:J_2} & A_{2b}^{s_2:J_2} \end{bmatrix}$$

$$\times \begin{bmatrix} C_{1a}^{J_1} & {}^{1a}R_{s_1}^{J_1} & 0 & 0 \\ C_{1b}^{J_1} & {}^{1b}R_{s_1}^{J_1} & 0 & 0 \\ 0 & 0 & C_{2a}^{J_2} & {}^{2a}R_{s_2}^{J_2} \\ 0 & 0 & C_{2b}^{J_2} & {}^{2b}R_{s_2}^{J_2} \end{bmatrix}$$

$$\times \begin{bmatrix} 1 & 0 & 0 & -R_{s_2}^{J_1} \\ 0 & 1 & 0 & -R_{s_2}^{s_1} \\ 0 & -R_{s_1}^{J_2} & 1 & 0 \\ 0 & -R_{s_1}^{s_2} & 0 & 1 \end{bmatrix} = \begin{bmatrix} 1 & 0 & 0 & 0 \\ 0 & 1 & 0 & 0 \\ 0 & 0 & 1 & 0 \\ 0 & 0 & 0 & 1 \end{bmatrix}. \quad \text{(B.6)}$$

Equation (B.5) can also be written as

$$\mathbf{A}\cdot\mathbf{D}(\mathbf{R}) = \mathbf{M}^{-1} \quad \text{(B.7)}$$

or

$$\mathbf{A} = \mathbf{M}^{-1}\cdot\mathbf{D}(\mathbf{R})^{-1}. \quad \text{(B.8)}$$

Each of the matrix blocks in $\mathbf{D}(\mathbf{R})^{-1}$ is the inverse of an intramodular internal response

matrix, which, equals the corresponding intra-modular co-control matrix (Hofmeyr *et al.*, 1993; Hofmeyr & Cornish-Bowden, 1996). Elements of this matrix quantify the extent to which variables within modules vary together when the activity of any step is modulated. Therefore,

$$\mathbf{A} = \mathbf{M}^{-1} \cdot \mathbf{D}(\mathbf{O}). \tag{B.9}$$

For the two-module example eqn (B.8) can be written as

$$\begin{bmatrix} A_{1a}^{J_1:J_1} & A_{1b}^{J_1:J_1} & A_{2a}^{J_1:J_2} & A_{2b}^{J_1:J_2} \\ A_{1a}^{s_1:J_1} & A_{1b}^{s_1:J_1} & A_{2a}^{s_1:J_2} & A_{2b}^{s_1:J_2} \\ A_{1a}^{J_2:J_1} & A_{1b}^{J_2:J_1} & A_{2a}^{J_2:J_2} & A_{2b}^{J_2:J_2} \\ A_{1a}^{s_2:J_1} & A_{1b}^{s_2:J_1} & A_{2a}^{s_2:J_2} & A_{2b}^{s_2:J_2} \end{bmatrix}$$

$$= \begin{bmatrix} 1 & \dfrac{R_{s_2}^{J_1} R_{s_1}^{s_2}}{1 - R_{s_2}^{s_1} R_{s_1}^{s_2}} \\ 0 & \dfrac{1}{1 - R_{s_2}^{s_1} R_{s_1}^{s_2}} \end{bmatrix}$$

$$\times \begin{bmatrix} 1 & 1 & 0 & 0 \\ O_{1a}^{s_1:J_1} & O_{1b}^{s_1:J_1} & 0 & 0 \\ 0 & 0 & 1 & 1 \\ 0 & 0 & O_{2a}^{s_2:J_2} & O_{2b}^{s_2:J_2} \end{bmatrix}. \tag{B.10}$$

For the A-coefficients of a specific module i one can write

$$\mathbf{A}_i^i = (\mathbf{M}^{-1})_{ii} \mathbf{O}_i^i. \tag{B.11}$$

To give an example, for module 1 in the two-module system this equation is

$$\mathbf{A}_1^1 = (\mathbf{I} - \mathbf{M}_2^1 \mathbf{M}_1^2)^{-1} \mathbf{O}_1^1. \tag{B.12}$$

If the diagonal matrix used to construct $\mathbf{A}_1^1$ and $\mathbf{O}_1^1$ contained J_1-control coefficients the explicit matrix equation is

$$\begin{bmatrix} \dfrac{G_{1a}^{J_1}}{C_{1a}^{J_1}} & \dfrac{G_{1b}^{J_1}}{C_{1b}^{J_1}} \\ \dfrac{G_{1a}^{s_1}}{C_{1a}^{J_1}} & \dfrac{G_{1b}^{s_1}}{C_{1b}^{J_1}} \end{bmatrix} = \begin{bmatrix} 1 & \dfrac{R_{s_2}^{J_1} R_{s_1}^{s_2}}{1 - R_{s_2}^{s_1} R_{s_1}^{s_2}} \\ 0 & \dfrac{1}{1 - R_{s_2}^{s_1} R_{s_1}^{s_2}} \end{bmatrix} \begin{bmatrix} 1 & 1 \\ \dfrac{C_{1a}^{s_1}}{C_{1a}^{J_1}} & \dfrac{C_{1b}^{s_1}}{C_{1b}^{J_1}} \end{bmatrix} \tag{B.13}$$

or, in terms of A and O-coefficients,

$$\begin{bmatrix} A_{1a}^{J_1:J_1} & A_{1b}^{J_1:J_1} \\ A_{1a}^{s_1:J_1} & A_{1b}^{s_1:J_1} \end{bmatrix} = \begin{bmatrix} 1 & \dfrac{R_{s_2}^{J_1} R_{s_1}^{s_2}}{1 - R_{s_2}^{s_1} R_{s_1}^{s_2}} \\ 0 & \dfrac{1}{1 - R_{s_2}^{s_1} R_{s_1}^{s_2}} \end{bmatrix} \times \begin{bmatrix} 1 & 1 \\ O_{1a}^{s_1:J_1} & O_{1b}^{s_1:J_1} \end{bmatrix}. \tag{B.14}$$

Solving for the first row of $\mathbf{A}_1^1$ gives

$$A_{1a}^{J_1:J_1} = 1 + \frac{R_{s_2}^{J_1} R_{s_1}^{s_2}}{1 - R_{s_2}^{s_1} R_{s_1}^{s_2}} O_{1a}^{s_1:J_1}, \tag{B.15}$$

$$A_{1b}^{J_1:J_1} = 1 + \frac{R_{s_2}^{J_1} R_{s_1}^{s_2}}{1 - R_{s_2}^{s_1} R_{s_1}^{s_2}} O_{1b}^{s_1:J_1}. \tag{B.16}$$

If the diagonal matrix used to construct $\mathbf{A}_1^1$ and $\mathbf{O}_1^1$ contained s_1-control coefficients one obtains

$$\begin{bmatrix} A_{1a}^{J_1:s_1} & A_{1b}^{J_1:s_1} \\ A_{1a}^{s_1:s_1} & A_{1b}^{s_1:s_1} \end{bmatrix} = \begin{bmatrix} 1 & \dfrac{R_{s_2}^{J_1} R_{s_1}^{s_2}}{1 - R_{s_2}^{s_1} R_{s_1}^{s_2}} \\ 0 & \dfrac{1}{1 - R_{s_2}^{s_1} R_{s_1}^{s_2}} \end{bmatrix} \times \begin{bmatrix} O_{1a}^{J_1:s_1} & O_{1b}^{J_1:s_1} \\ 1 & 1 \end{bmatrix}. \tag{B.17}$$

Solving for the second row of $\mathbf{A}_1^1$ gives

$$A_{1a}^{s_1:s_1} = A_{1b}^{s_1:s_1} = \frac{1}{1 - R_{s_2}^{s_1} R_{s_1}^{s_2}}. \tag{B.18}$$